No. : OM-E3342-0B

FURUNO

OPERATOR'S MANUAL

MARINE RADAR

MODEL 1760

FURUNO ELECTRIC CO., LTD.
NISHINOMIYA, JAPAN

9003100T (9003, yoha)
PRINTED IN JAPAN

WARNING AGAINST HIGH TENSION

The operation of this equipment involves the use of high voltage, which endangers human life. Although the design of the equipment has been made in due consideration of measures to insure the operator's safety, adequate precaution must be exercised when reaching inside the equipment for the purpose of maintenance and service. Do not change a component or inspect the equipment with the voltage applied. A residual charge may exist in some capacitors with the equipment turned off. Always short all supply lines to the chassis with an insulated screwdriver or a similar tool prior to touching the circuit.

FIRST AID IN CASE OF ELECTRIC SHOCK

When a victim struck by electricity is found, first switch off the equipment via the main switch on the equipment or the ship's distribution board. If this is not possible, protect yourself with dry insulating material (a wooden plate or rod, cloth, your belt, etc.) and pull the victim clear of electricity. If the victim is not breathing himself, apply artificial respiration according to the "Method of Artificial Respiration." Do not give up halfway. Perseverance and continual efforts are important in artificial respiration.

METHOD OF ARTIFICIAL RESPIRATION

Lay the victim on his back. Position yourself beside the victim's head and pinch his nose by your thumb and forefinger to prevent air leakage. Insert the thumb of your other hand between the victim's teeth and lift his chin up. Then, place the arm (the one closing the victim's nose) on the victim's forehead and press the head down so that the victim's head is given a maximum backward tilt with the chin prominent and the neck bent back. Seal the victim's mouth with your mouth and blow therein about half of the deeply inhaled air every time. After exhaling, turn your head to watch for a chest contraction, whilst inhaling deeply in readiness for the next blowing. Repeat the movements faster for the first 1 to 2 minutes and 12 times per minute thereafter.

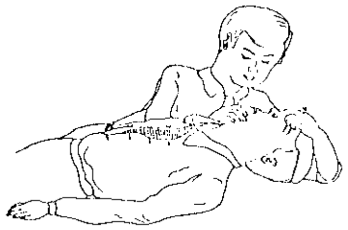

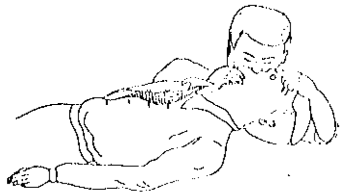

RADIATION HAZARD

Radiation emitted from the scanner can be harmful, particularly to the eyes. To avoid harmful radiation, ensure the radar is set to either ST-BY or OFF before beginning work on the scanner. Under no circumstances should you look directly into the scanner from a distance of less than 2 feet when the radar is in operation.

A WORD TO MODEL 1760 OWNERS:

Congratulations on your choice of the FURUNO Model 1760 Radar. We are confident that you will enjoy many years of operation with this piece of equipment.

For over 40 years FURUNO Electric Company has enjoyed an enviable reputation for quality and reliability throughout the world. This dedication to excellence is furthered by our extensive global network of agents and dealers.

The Model 1760 Radar is just one of the many Furuno developments in the field of radar. The compact, lightweight but rugged unit is easy to install and operate and is suitable for use on a wide variety of vessels.

This unit is designed and constructed to give the user many years of trouble-free operation. However, to obtain optimum performance from this unit, you should carefully read and follow the recommended procedures for installation, operation and maintenance. No machine can perform to the utmost of its ability unless it is installed and maintained properly.

We would appreciate feedback from you, the end-user, about whether we are achieving our purposes.

Thank you for considering and purchasing Furuno equipment.

CAUTION

No one navigational aid should be relied upon exclusively for the safety of vessel and crew. This navigator has the responsibility to check all aids available to confirm his position. Electronic aids are not a substitute for basic navigational principles and common sense.

NOTICE

TO

USERS OF FURUNO RADARS MODEL 1730/1760/1830/1930, FR-7010D/7040D

Two 5A fuses have been added to the spare parts from the production in September 1990. These fuses are for use with 24VDC or 32VDC power supplies. (The two 10A fuses are for 12VDC power supply.)

To show this addition in your manual please updata it with the information tabulated below. We apologize for the inconvenience.

<table>
<tr><th rowspan="2">Items to be added</th><th colspan="5">Pertinent pages</th></tr>
<tr><th>M1730</th><th>M1760</th><th>M1830
M1930</th><th>FR-
7010</th><th>FR-
7040</th></tr>
<tr><td>SPARE PARTS:
<table><tr><th>No.</th><th>Name</th><th>Type</th><th>Code No.</th><th>Q'ty</th><th>Remarks</th></tr><tr><td>1</td><td>Fuse</td><td>FGMB 10A 125VAC</td><td>000-104-815</td><td>2</td><td>for 12VDC ship's mains</td></tr><tr><td>2</td><td>Fuse</td><td>FGMB 5A 125VAC</td><td>000-112-785</td><td>2</td><td>for 24/32VDC ship's mains</td></tr></table></td><td>0-6</td><td>0-7</td><td></td><td></td><td></td></tr>
<tr><td><table><tr><th>No.</th><th>Name</th><th>Type</th><th>Code No.</th><th>Q'ty</th><th>Remarks</th></tr><tr><td>1</td><td>Fuse</td><td>FG80 10A 125VAC</td><td>000-549-065</td><td>2</td><td>for 12Vdc mains</td></tr><tr><td>2</td><td>Fuse</td><td>FG80-A 5A 125VAC</td><td>000-549-064</td><td>2</td><td>for 24/32Vdc mains</td></tr></table></td><td></td><td></td><td>4</td><td>3</td><td>4</td></tr>
<tr><td>Fuse replacement
To protect the equipment from serious damage, a 10A (for 12Vdc mains) or 5A (for 24/32Vdc mains) fuse is provided on the rear panel. The fuse protects against overvoltage/reverse polarity of the ship's mains or internal fault of the equipment. If the fuse has blown, first find the problem before replacing it with a new one. A fuse rated for more than 10A or 5A must not be used, since it may cause serious damage to the equipment. OVER FUSING WILL VOID WARRANTY.</td><td>4-1</td><td>4-1</td><td>49</td><td>51</td><td>51</td></tr>
<tr><td>Fuse Exchange For 24/32VDC Power Supplies
The display unit is shipped with a 10A fuse (F1351) fitted in the fuse holder on the rear panel. This fuse is for use with 12VDC power supply. For 24VDC or 32VDC power supplies, please exchange the fuse with the 5A fuse supplied.</td><td>6-8</td><td>6-8</td><td>15</td><td>15</td><td>15</td></tr>
<tr><td>CHECKING THE INSTALLATION
☐ 8) Check that fuse F1351 on the rear panel is 10A (for 12Vdc) or 5A (for 24/32Vdc).</td><td>6-9</td><td>6-9</td><td>15</td><td>15</td><td>15</td></tr>
</table>

Table of Contents

FEATURES 0-3

SPECIFICATIONS .... 0-4 to 0-7

1. PRINCIPLE OF OPERATION 1-1

2. OPERATIONAL OVERVIEW .... 2-1 to 2-14
- THE FRONT PANEL 2-1
- THE REAR PANEL 2-2
- TURNING THE UNIT ON AND OFF 2-3
- SETTING UP 2-3
- MEASURING RANGE AND BEARING 2-7
- REDUCING OR ELIMINATING INTERFERENCE 2-10
- BETTER DISTINCTION OF ECHOES 2-11
- SETTING/DELETING THE ALARM 2-11
- INDICATION OF L/L DATA (OPTION) 2-14

3. APPLICATION .... 3-1 to 3-10
- FACTORS AFFECTING MINIMUM RANGE 3-1
- FACTORS AFFECTING MAXIMUM RANGE 3-2
- INTERPRETING THE DISPLAY 3-3
- POSITION FIXING WITH RADAR 3-7
- COLLISION AVOIDANCE 3-9
- AIDS TO NAVIGATION 3-10

4. MAINTENANCE 4-1
- GENERAL 4-1
- SCANNER UNIT 4-1
- DISPLAY UNIT 4-1

5. TROUBLESHOOTING .... 5-1 to 5-5
- BASIC TROUBLESHOOTING 5-1
- MORE EXTENSIVE TROUBLESHOOTING 5-2
- CHECKING THE MAGNETRON (Measuring the Magnetron Current) 5-3

6. INSTALLATION .... 6-1 to 6-16
- GENERAL 6-1
- SCANNER UNIT INSTALLATION 6-1
- DISPLAY UNIT INSTALLATION 6-7
- CHECKING THE INSTALLATION 6-9
- INITIAL PROCEDURES 6-10
- RELATIVE BEARING ALIGNMENT 6-10
- SWEEP TIMING ADJUSTMENT 6-12
- PRESET GAIN ADJUSTMENT 6-13
- TUNING & TUNING INDICATOR SENSITIVITY ADJUSTMENT 6-13
- PANEL ILLUMINATION ADJUSTMENT 6-13
- MAGNETRON HEATER VOLTAGE ADJUSTMENT 6-14
- MEASUREMENT OF BLIND SHADOW SECTORS 6-14

SCHEMATIC DIAGRAMS .... S-1 to S-8

OUTLINE DRAWINGS D-1 toD-2

FEATURES

The Model 1760 has a large variety of functions, all contained in a rugged plastic case.

All controls respond immediately to the operator's command and each time a touchpad is depressed, the corresponding change can be seen on the screen.

* Daylight viewing radar specially designed for small craft and sailing yachts.
* Traditional FURUNO reliability and quality in a compact, lightweight and low-cost radar.
* Field-proven, heavy duty gearbox and attractive 3.5-ft open radiator capable of withstanding 100-kt wind velocity.
* High definition 7" raster-scan display.
* 4 levels of target quantization for high target definition without problems associated with single-level quantization systems.
* On-screen alpha-numeric readout of all operational information.
* 8 ranges from 0.25 to 24nm.
* 3 pulselengths and pulse repetition rates automatically selected, for optimum short-range to long-range performance.
* Guard zone alarm, for use as an anti-collision aid, provided as standard feature.
* EBL (Electronic Bearing Line), VRM (Variable Range Marker), echo stretch, interference rejector, anti-clutter sea and rain controls provided.
* Operates on 10.2 to 40.0VDC power supply and consumes only 55W. A unique "Economy" mode provided to reduce power consumption to 33W during stand-by periods. Protection against reverse polarity and excessive voltage provided.
* Ship's position in latitude/longitude optionally shown in the bottom text area from external navigator having NMEA 0183 (or FURUNO CIF) output format.

SPECIFICATIONS OF MODEL 1760

SCANNER UNIT

1. Radiator:	Slotted Waveguide Array
2. Radiator Length:	100cm
3. Horizontal Beamwidth:	2.4°
4. Vertical Beamwidth:	25°
5. Sidelobe Attenuation:	
Within ± 20° of mainlobe:	-24dB or less
Outside ± 20° of mainlobe:	-30dB or less
6. Polarization:	Horizontal
7. Antenna Rotation:	24 r.p.m. nominal

TRANSCEIVER MODULE (contained in the scanner housing)

1. Transmitting Tube:	Magnetron 9M302/E3513
2. Frequency & Modulation:	9410MHz ± 30MHz, P0N
3. Peak Output Power:	3kW nominal
4. Pulselength & Pulse Repetition Rate:	

Range (nm) / Item	0.25	0.5	1	2	4	8	16	24
Pulse Repetition Rate	Approx. 2100Hz		Approx. 1200Hz		Approx. 600Hz			
Pulselength	0.08us (Short)		0.3us (Mid.)		0.8us (Long)			

5. Modulator:	FET Switching Method
6. I.F.:	60MHz
7. Tuning:	Manual
8. Receiver Front End:	MIC (Microwave IC)
9. Bandwidth:	7MHz (short/mid. pulses) 3MHz (long pulse)
10. Duplexer:	Circulator with diode limiter
11. Noise Figure:	6dB nominal

DISPLAY UNIT

1. Indication System:	Raster scan, Daylight display
2. Picture Tube:	7-inch diagonal, green phosphor CRT

3. Range (nm):	0.25	0.5	1	2	4	8	16	24
4. Range Ring Interval (nm):	0.125	0.125	0.25	0.5	1	2	4	4
5. Number of Rings:	2	4	4	4	4	4	4	6

6. Bearing Resolution: 2.9°
7. Bearing Accuracy: Better than 1°
8. Minimum Range: Better than 29m
9. Range Ring Accuracy: 0.9% or 8m, whichever is the greater.
10. VRM Accuracy: 0.9% or 8m, whichever is the greater.
11. Mark Indication: Heading Mark, Bearing Scale, Range Ring, VRM, EBL, Tuning Bar, Alarm Zone
12. Numeral/Character Indication: Range, Range Ring Interval, EBL, VRM, Interference Rejection (IR), ST-BY, Rain Clutter Rejection (FTC), Echo Stretch (ES), Radar Alarm (ALARM), Latitude/Longitude (Option)
13. Interference Rejector: Built-in
14. External Sig. In/Out Terminals: NMEA 0183 terminal (In)
External Buzzer terminal (Out)
Monitor terminal (Out)

ENVIRONMENT CONDITION

1. Vibration:

Vibration Freq.	Total Amplitude
1 to 12.5 Hz	± 1.6 mm
12.5 to 25 Hz	± 0.38 mm
25 to 50 Hz	± 0.10 mm

2. Ambient Temperature: Scanner Unit ---------- –25°C to +70°C
Display Unit ---------- –15°C to +55°C
3. Humidity: Relative humidity, 95% or less at +40°C

POWER SUPPLY & POWER CONSUMPTION

10.2VDC - 40.0VDC, 55W approx. (33W approx. in economy mode)
100/110/220/230VAC, 50/60Hz, 1ø (rectifier required)

COMPASS SAFE DISTANCE

	Standard Compass	Steering Compass
Display Unit	0.5 m	0.4 m
Scanner Unit	1.8 m	1.35 m

COMPLETE SET:

No.	Name	Type	Code No.	Q'ty	Remarks
1	Scanner Unit	XN8-RSB-0035	000-083-689	1	23kg
2	Display Unit	RDP-075-S	000-088-780	1	4.9 kg, for other than W. Ger.
		RDP-075-WG	000-088-781		4.9 kg, for W. Ger.
3	Installation Materials	CP03-08300	000-083-092	1 set	w/10m Sig. Cable Assy.
4	Accessories	FP03-02600	000-081-064	1 set	for other than W. Ger.
		FP03-03400	000-080-918		for W. Ger.
5	Spare Parts	SP03-07100	000-080-933	1 set	

INSTALLATION MATERIALS:

No.	Name	Type	Code No.	Q'ty	Remarks
1	Power Cable Assy. (3.5m)	03S7434	000-113-501	1	Connector fitted.
2	Signal Cable Assy. (10m)	S03-23-10	008-240-300		Select one. Connector fitted.
	Signal Cable Assy. (15m)	S03-23-15	008-240-310		
	Signal Cable Assy. (20m)	S03-23-20	008-240-320		
	Signal Cable Assy. (30m)	S03-23-30	008-240-330		
3	Seal Washer	CW1053DX	000-850-021	4	for scanner unit mounting
4	Vent Tube	03-002-3226	100-087-630	1	
5	Crimp-on Lug	320882	000-537-110	1	
6	Crimp-on Lug	FV1.25-3 red	000-538-113	20	
7	Crimp-on Lug	FV5.5-S3	000-538-120	1	
8	Hex. Bolt	M12x60 SUS304	000-862-191	4	
9	Hex. Nut	M12 SUS304	000-863-112	4	
10	Flat Washer	M12 SUS304	000-864-132	4	
11	Spring Washer	M12 SUS304	000-864-263	4	
12	Slotted Pin G-type	10x45 SUS304	000-866-390	2	
13	Hex. Bolt	M8x30 SUS304	000-862-187	4	
14	Flat Washer	M8 SUS304	000-864-130	4	
15	Spring Washer	M8 SUS304	000-864-262	4	
16	O-Ring	JISB2401-1A-G80	000-851-313	1	
17	Adhesive	#1211 (50g)	000-854-118	1	
18	Tapping Screw	6x20 SUS304	000-800-414	5	for display unit mounting
19	Flat Washer	M6 SUS304	000-864-129	5	

Note: No.13 thru No.17 are supplied with radiator XN8.

ACCESSORIES:

No.	Name	Type	Code No	Q'ty	Remarks
1	Bracket Assy.	FP03-02610	008-191-860	1	
2	Hood Assy.	FP03-02620	008-191-870	1	for other than W. Ger.
		FP03-02640	008-376-440		for W. Ger.
3	Knob Bolt	KG-B3 M8x25	000-800-554	2	for display unit hanging on bracket
4	Rubber Washer	02-052-1302-1	100-022-531	2	
5	Washer	05-012-0125-1	591-201-251	2	

SPARE PARTS:

No.	Name	Type	Code No.	Q'ty	Remarks
1	Fuse	FGMB 10A 125VAC	000-104-815	2	
2	L-handle Socket Wrench	Diagonal 13mm	000-830-110	1	
3	Spare Parts Box	For F710	000-831-610	1	

OPTION:

No.	Name	Type	Code No.	Q'ty	Remarks
1	Rectifier	RU-3423	000-030-443	1	for AC mains
2	External Buzzer	OP03-21	000-030-097	1	
3	Gasket	OP03-46	008-109-490	1	for flush mount
4	NMEA Cable	22S0021-3	000-109-517	1	Connector fitted, 5m
5	Dust Cover	03-028-0401	100-087-000	1	for display unit
6	EMI Filter	OP03-37	008-104-340	1	for other than W. Ger.

1. PRINCIPLE OF OPERATION

The term "RADAR" is an acronym meaning RAdio Detection And Ranging. Although the basic principles of radar were developed during World War II, primarily by scientists in Great Britain and the United States, the use of echoes as an aid to navigation is not a new development.

Before the invention of radar, when running in fog near a rugged shoreline, ships would sound a short blast on their whistles, fire a shot, or strike a bell. The time between the origination of the sound and the returning of the echo indicated how far the ship was from the cliffs or the shore. The direction from which the echo was heard indicated the relative bearing of the shore.

Today, the method of determining the distance to a target is much more accurate because of pulse-modulated radar. Pulse-modulated radar determines the distance to the target by calculating the time difference between the transmission of a radar signal and the reception of the reflected echo. It is a known fact that radar waves travel at a nearly constant speed of 162,000 nautical miles per second. Therefore the time required for a transmitted signal to travel to the target and return as an echo to the source is a measure of the distance to the target. Note that the echo makes a complete round trip, but only half the time of travel is needed to determine the one-way distance to the target. This radar automatically takes this into account in making the range calculation.

The bearing to a target found by the radar is determined by the direction in which the radar scanner antenna is pointing when it emits an electronic pulse and then receives a returning echo. Each time the scanner rotates pulses are transmitted in the full 360° circle, each pulse at a slightly different bearing from the previous one. Therefore, if we know the direction in which the signal is sent out we know the direction from which the echo must return.

Note that the speed of the radar waves out to the target and back again as echoes is extremely fast compared to the speed of rotation of the antenna. By the time radar echoes have returned to the scanner, the amount of scanner rotation after initial transmission of the radar pulse is extremely small.

The range and bearing of a target is displayed on what is called a Plan Position Indicator or PPI. This display is essentially a polar diagram, with the transmitting ship's position at the center. Images of target echoes (sometimes called a "pip") are received and displayed at their relative bearings, and at their distance from the PPI center. With a continuous display of the images of targets, the motion of the transmitting ship is also displayed.

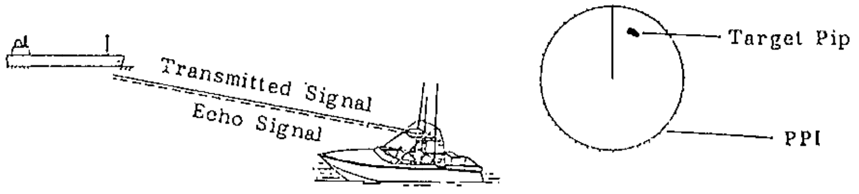

Fig.1-1 How Radar Works

2. OPERATIONAL OVERVIEW

CAUTION

1. Prior to switching on the radar, make sure that no person nor obstacle is in the vicinity of the scanner unit.
2. Because of hazardous radar energy, NEVER look into the beam of a transmitting scanner radiator at close distance.

THE FRONT PANEL

This radar is basically very easy to operate. If you change a control setting you will see the associated reaction almost immediately on the screen. Most touchpads carry abbreviated names to show their functions. The same nomenclature appears on the screen for confirmation. All controls are color-coded for easy identification of their function.

The TUNE, A/C SEA, and GAIN controls (dark blue) are grouped together because they control the radar receiver. To prevent accidental alteration of the settings, all controls in this group may be locked by pushing in the control. When readjustment is necessary, push in and release the control to bring it out again.

An LED (Light Emitting Diode) lights up when the system is in the "Economy" mode, which is nearly same as stand-by mode. During this mode, power consumption of 22W approx. can be saved.

The **POWER/OFF** and **TX/OFF** touchpads colored orange and dark brown turn on/off power and transmission.

The light blue touchpads, **HM/OFF**, **FTC**, **IR**, **RING**, **ES**, **BRILL**, **L/L** and **ALARM/RESET**, are mostly on/off controls. Adjusting the brightness of the CRT, reducing radar interference, and temporarily erasing the heading mark are some of the functions of this group of touchpads.

The four orange-colored touchpads, **GUARD**, **VRM**, **EBL**, **RANGE**, are used with the + and – touchpads. When activated by pressing one of the above four touchpads, the + and the – touchpads maneuver the alarm zone, operate the VRM and EBL or change the range scale in use. The + touchpad raises the alarm zone range, increases the radius of the VRM, rotates the EBL clockwise or selects a higher range. The – touchpad lowers the alarm zone range, decreases the radius of the VRM, rotates the EBL counterclockwise or selects a lower range.

For operator convenience, a white light frames the on-screen indicator of the touchpad last pressed, among VRM, EBL and GUARD ("ALARM" on the display). As for RANGE, the range in use is underlined if the **RANGE** touchpad is last pressed.

Press and hold the **GUARD**, **VRM** and **EBL** touchpads for two to three seconds to cancel each function.

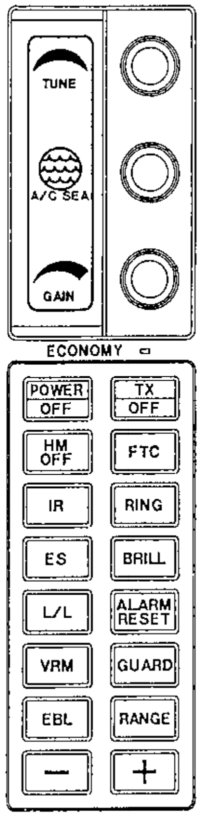

TUNE:	This control keeps the receiver tuned to the transmitter.
A/C SEA:	Used to suppress sea clutter caused by waves. A/C SEA stands for anti-clutter sea.
GAIN:	Adjusts the sensitivity of the receiver.
ECONOMY:	Small LED lights when the radar is in the "economy (stand-by)" mode.
POWER/OFF:	Turns on the system. Press this and **TX/OFF** touchpads simultaneously to turn off the system.
TX/OFF:	Sets the radar to either transmit or economy (stand-by).
HM/OFF:	Temporarily erases the heading mark from the screen.
FTC:	Used to suppress precipitation clutter.
IR:	Eliminates or reduces interference caused by other nearby operating radars.
RING:	Displays/erases the fixed range rings.
ES:	Activates/releases the echo stretch function, which stretches echoes lengthwise for better distinction.
BRILL:	Adjusts the brightness of the CRT.
L/L:	Displays/erases the own ship's position shown by latitude and longitude. This function is effective only when optional navigation equipment is connected.
ALARM/RESET:	Silences/actuates the audible alarm.
VRM:	Displays/erases the Variable Range Marker.
GUARD:	Displays/erases an alarm zone.
EBL:	Displays/erases the Electronic Bearing Line.
RANGE:	Activates the controls used to select the range.
+ / – :	Maneuvers the EBL and VRM, changes alarm zone, and selects the range.

THE REAR PANEL

The **SCANNER** switch is provided on the rear panel to turn on/off the scanner radiator. This switch is usually left upward ("ON" position) except for field servicing.

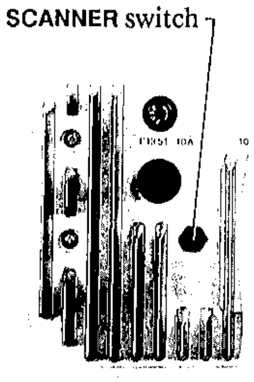

Fig.2-1 Rear Panel

TURNING THE UNIT ON AND OFF

After having confirmed that the **SCANNER** switch is turned on, press the **POWER/OFF** touchpad and power is applied to all circuits of the radar system. The touchpad panel will light up, the antenna will begin to rotate, but no targets appear on the CRT. This is because the magnetron needs approximately 2 min. and 30 sec. to warm up before the radar can be operated. The time remaining for warm up of the magnetron is displayed at the lower center of the CRT, from 150 sec. to 1 sec.

Press both the **POWER/OFF** and **TX/OFF** touchpads at the same time to turn the system off.

SETTING UP

After power is applied and the magnetron has warmed up, the message "ST-BY" (Stand-by) will appear at lower center of the display screen, indicating the radar is ready to transmit. However, no targets will appear on the screen until the radar is put into transmit by pressing the **TX/OFF** touchpad (TX is short for "transmit"). In ST-BY the radar is available for use at anytime-- the scanner is rotating, but no radar waves are being transmitted.

Press the **TX/OFF** touchpad to begin transmission; the display screen will light up, and the status of the indicators on the display screen will default to the following: **RANGE**, 4nm; **IR**, ON, and all other indicators, OFF. Fig.2-2 shows the location of the indicators. Additionally, the screen brilliance will be medium-bright and the heading mark and the tuning bar are displayed. When the radar is transmitting, any echoes from targets will be displayed on the CRT.

At this time you may want to take a closer look at the display screen. The outermost ring on the screen defines the effective diameter of the display. Every one degree on the ring is marked by a short dashed line, and every ten degrees by a longer dashed line.

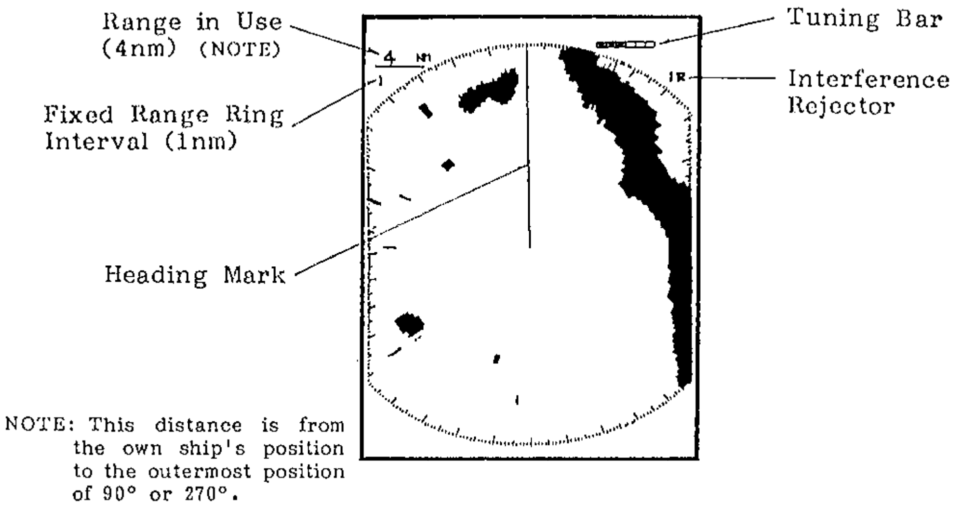

Fig.2-2 Location of Display Screen Indicators

The solid radial line at 0° is the heading mark. The heading mark is always on the screen and indicates the ship's heading. You may temporarily erase the mark by holding down the **HM/OFF** touchpad.

The nearly invisible line rotating radially around the screen is called the "sweep." The sweep rotates synchronously with the scanner, so at any given time the direction in which the scanner is pointing is known. With every rotation echoes appear on the sweep as brighter spots of light, thus presenting a complete picture of the surrounding area.

Placing the radar in stand-by helps extend component life. Therefore, when the radar will not be used for an extended period of time, but you want to keep it in a state of readiness, set it to "ECONOMY" mode by pressing the **TX/OFF** touchpad again. Power for the CRT is cut off after two to three sec. and an orange-colored LED lights up to show that the "Economy" mode is on.

Range Selection

The range selected automatically determines the fixed range ring interval, the number of fixed range rings, pulselength, and pulse repetition, for optimal detection in both short and long ranges (see the table below). Most ranges are either half or twice their neighbor for easy identification of targets when changing the range. The present range and its ring interval are displayed at the top left corner of the CRT.

The range chosen varies depending on circumstances. When navigating in or around crowded harbors, it is best to select a range between 0.5 and 2nm to watch for possible collision situations. If you select a lower range while on open water, increase the range occasionally to watch for vessels that may be heading your way. Remember that the maximum range a radar can see is dependent on many factors. Factors affecting maximum range are discussed in the APPLICATION section.

There are eight ranges available: 0.25, 0.5, 1, 2, 4, 8, 16 and 24nm. To select a range, press the **RANGE** touchpad, followed by pressing the + or − touchpad, depending on whether you want to select a higher range or a lower range. It is possible to increment or decrement the range setting automatically by holding down the + or − touchpad.

Table 2-1 Range Setting and Corresponding Fixed Range Ring Interval and Number of Fixed Range Rings

Range (nm)	0.25	0.5	1	2	4	8	16	24
Range Ring Interval(nm)	0.125	0.125	0.25	0.5	1	2	4	4
No. of Fixed Range Rings	2	4	4	4	4	4	4	6

Setting the GAIN Control

The GAIN control is used to adjust the sensitivity of the receiver, and thus the strength of echoes as they appear on the screen. It is adjusted so that a speckled noise background is just visible on the CRT.

To become acquainted with the way the GAIN control works, try rotating it between its fully counterclockwise and clockwise position as you observe the display. To properly set the gain, one of the higher ranges (16nm or 24nm) should be used--the speckled noise background is more apparent on these ranges. As you slowly turn the GAIN control clockwise you should be able to see the speckled background appear when the position of the control is between 2 and 3 o'clock. If you set up for too little gain, weak echoes may be missed. If you turn the GAIN control too far clockwise, yielding too much speckled noise background, strong targets may be missed because of the poor contrast between desired echoes and the background noise on the display. Fig.2-3 illustrates examples of gain settings which are too high, proper, and too low.

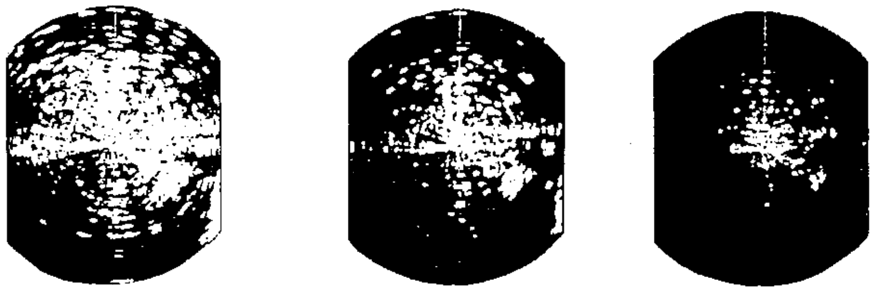

(A) too high (B) proper (C) too low

Fig.2-3 Setting the GAIN Control

In certain circumstances it may be useful to slightly reduce the gain to improve range resolution; clear up the picture; or reduce clutter caused by rain or snow.

Range resolution is a measure of the capability of a radar to display as separate pips the echoes received from two targets which are on the same bearing, and are close together radially. With reduction in the gain setting, the echoes may be made to appear as separate pips on the display screen.

When sailing or cruising in crowded regions a slight reduction in gain often helps to clear up the picture. This should be done carefully, otherwise weak targets may be missed.

Echoes from ships inside a squall or storm may be obscured if the gain is at its normal setting, since the clutter may have masked, but not completely, echoes from the targets.

In *all* cases, the gain should be returned to its original position after any temporary reduction is no longer required.

Adjusting the A/C SEA Control

Echoes from waves can be troublesome, covering the central part of the display with random signals known as "sea clutter." The higher the waves, and the higher the scanner above the water, the further the clutter will extend. Sea clutter appears on the screen as a large number of small echoes which might affect radar performance (see Fig.2-4 A). The action of the A/C SEA is to reduce the amplification of echoes at short ranges (where clutter is the greatest) and progressively increase amplification as the range increases, so that amplification will be normal at those ranges where sea clutter is not experienced. The control is only effective up to a maximum of about 4 miles.

The proper setting of the A/C SEA is such that the clutter is broken up into small dots, and small targets become distinguishable. If the control is not sufficiently advanced, other targets will be hidden in the clutter, while if it is set too high, sea clutter and targets will both disappear from the screen. As a general rule of thumb, turn the control clockwise until clutter has disappeared to leeward, but a little is still visible windward. Fig.2-4 illustrates how to adjust the A/C SEA control.

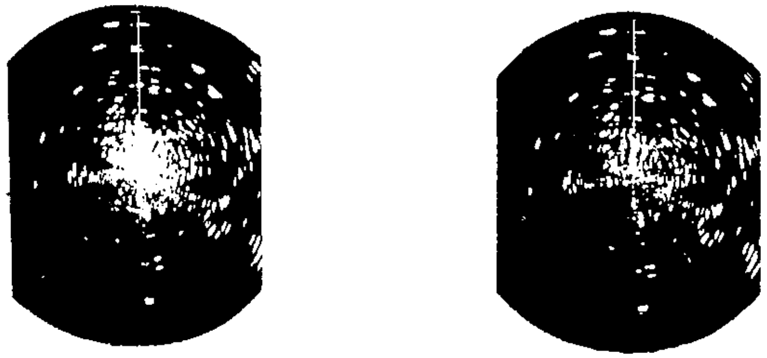

(A) Sea Clutter, A/C SEA control "OFF" (B) A/C SEA properly adjusted

Fig.2-4 Adjusting the A/C SEA

A common mistake is too over adjust the control so that all the clutter is removed. By rotating the control fully clockwise you will see how dangerous this may be; a dark zone is created near the center of the screen. This dark zone can be dangerous (targets may be missed), especially if the gain has not been properly adjusted. *Always* leave a little clutter visible on the screen, this ensures weak echoes will not be suppressed. If no clutter is visible on the screen, leave the control in the fully counterclockwise position.

The GAIN is normally set to the point where there is a trace of noise speckles showing on the screen on the 16 or 24 mile range, and then the A/C SEA is adjusted on the 0.25 mile range scale so that close-in targets in a harbor situation are clearly seen. This equalizes the GAIN and A/C SEA characteristics for all ranges, short and long.

In moderate conditions on the open sea, where there are no definite targets to be seen on the shorter ranges, you should still adjust the GAIN on the 16 or 24 mile range for some noise speckles on the CRT, and then go down to the 0.5 or 1 mile range to adjust the A/C SEA until a bit of sea clutter is observed close to the boat.

Adjusting the Brightness of the CRT

The **BRILL** touchpad is used to adjust the brightness of the CRT. As a general rule of thumb, choose a brighter setting for daytime use, and a lower setting for nighttime operation. However, note that with too little brilliance the display becomes difficult to see, and excessive brilliance decreases the life of the CRT.

There are four levels of illumination: dim, medium, medium-bright, and bright. Each time the **BRILL** touchpad is pressed the level will change in the above sequence. The status of this touchpad defaults to medium-bright when turning on the system.

TUNE Control Adjustment

This control tunes the receiver to the exact frequency of the transmitter. For the first 30 minutes of operation the tuning should be checked periodically to ensure that the radar is operating properly. Readjustment after the first 30 minutes is normally not required.

The tuning is made by moving the control slowly through the limits of its travel to find the position where a comparatively weak long range echo is discerned on the screen with maximum definition. The tuning condition can be monitored by observing the tuning bar at the top right corner of the CRT. The best tuning position is usually found at a point close to where the control is advanced 50% of its travel and the greatest number of tuning bar is displayed.

MEASURING RANGE AND BEARING

In the basic radar system your ship is in the center of the screen, and any target received is displayed in a map-like projection throughout 360°. This allows the bearing and range from your boat to a target appearing on the screen to be measured.

Range is measured with the fixed range rings (rough estimate) or Variable Range Marker (VRM), and bearing is measured with the EBL (Electronic Bearing Line). The EBL and/or VRM markers are activated by pressing the corresponding touchpad, and the + and – touchpads are used to maneuver them. Press the + touchpad to rotate the EBL clockwise or increase the radius of the VRM. To rotate the EBL counterclockwise or decrease the radius of the VRM, press the – touchpad. By holding down + / – touchpad the setting of the marker is changed much more rapidly, and in the case of the VRM until the minimum or maximum is reached. Now try operating the EBL. While you press either + / – touchpad, notice the EBL indicator at the lower left of the screen -- the numeral varies as the EBL rotates.

The EBL and/or VRM are erased from the screen by pressing and holding the **EBL** and/or **VRM** touchpads for two to three seconds.

Range Measurement

To obtain a rough measurement of the range to a target pip, the fixed range rings are used. The fixed range rings are the solid rings appearing on the CRT. These rings are activated/deactivated by pressing the **RING** touchpad. The range to a target using the fixed range rings is determined by counting the number of rings between the center of the CRT and the target. Check the fixed range ring interval (this value appears at the second top left corner of the CRT) and judge the distance of the echo from the inner edge of the nearest ring. For example, the 4nm range scale has four fixed range rings, each at a 1nm interval. Therefore if a target is positioned close to the 2nd ring from the center of the display, the range to the target would be 2nm.

To obtain a more accurate reading of the distance to a target the VRM should be used. Now try measuring the range of the same target pip with the VRM. Activate the marker by pressing the **VRM** touchpad. The VRM is presented on the screen as a dashed ring so as to distinguish it from the fixed range rings. Next, press either + or – touchpad so that the circle described by the VRM just touches the inside edge of the pip. You will see how much more accurate the VRM is by checking the range measured, which is shown below the VRM indicator at the lower right-hand side of the screen. The VRM is capable of measuring the range to targets from 0.001nm to 24nm. Fig.2-5 illustrates the proper method of range measurement with the VRM.

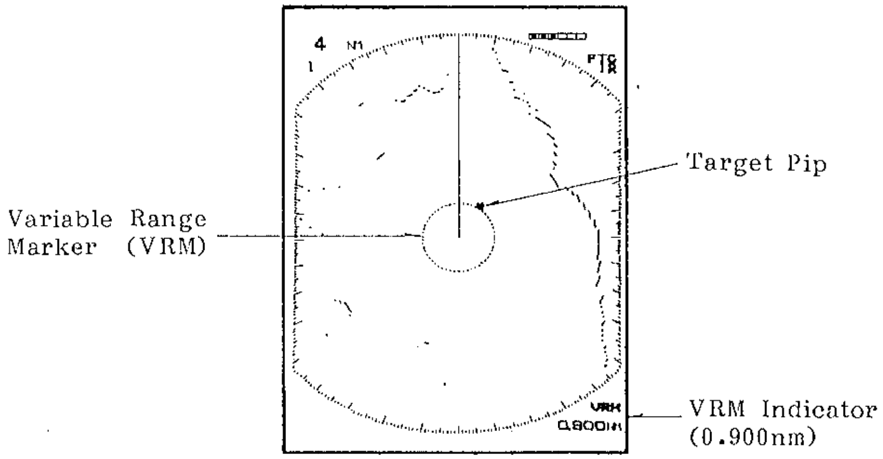

Fig.2-5 Range Measurement with the VRM

Bearing Measurement

To measure the bearing of a target pip, you would activate the EBL by pressing the **EBL** touchpad. The EBL is presented on the screen as a dashed radial line so as to distinguish it from the heading mark. Next press + or – touchpad so that the EBL bisects the center of the target. Fig.2-6 illustrates the proper method of bearing measurement using the EBL. The measured bearing will appear below the EBL indicator at the lower left- hand side of the screen. Bearing is measured to the nearest 0.5°.

The bearing measured by the built-in EBL in this radar gives "relative bearings"; that is, the bearings are relative to the bow of the vessel. If you spot a radar target at 45 degrees relative to your bow at a range of 1/2 mile from your boat, you should be able to look out the window and look at the target visually, provided of course that you aren't in a pea-soup fogbank.

If you want to relate the stationary targets seen on the radar to the markings on a navigational chart, you will have to determine where these radar targets are with respect to True North, given that you want to be able to read your navigational charts right-side up.

The procedure is simple: the ship's magnetic heading at the time the radar target is observed is added to the bearing of the target relative to the bow of the boat, and to this sum is added the magnetic deviation for the geographic area and the magnetic deviation of the boat. If the sum total exceeds 360 degrees, the 360 degrees is subtracted from the total to yield finally the radar target heading relative to True North.

For example, assume that the ship's heading is 45 degrees magnetic, the variation for the area is 16 degrees Easterly, and at 45 degrees the deviation for the boat is 2 degrees Westerly. The True Heading of the vessel is thus: 45 + 16 - 2 = 59 degrees relative to True North. If a buoy is spotted on the radar at a relative bearing of 256 degrees, the resulting True target bearing is 256 + 59 = 315 degrees. If the buoy had been at 345 degrees relative heading on the radar, the resulting True target bearing would be 345 + 59 = 404. Since this is greater than 360, the result is 404 - 360 = 44 degrees True.

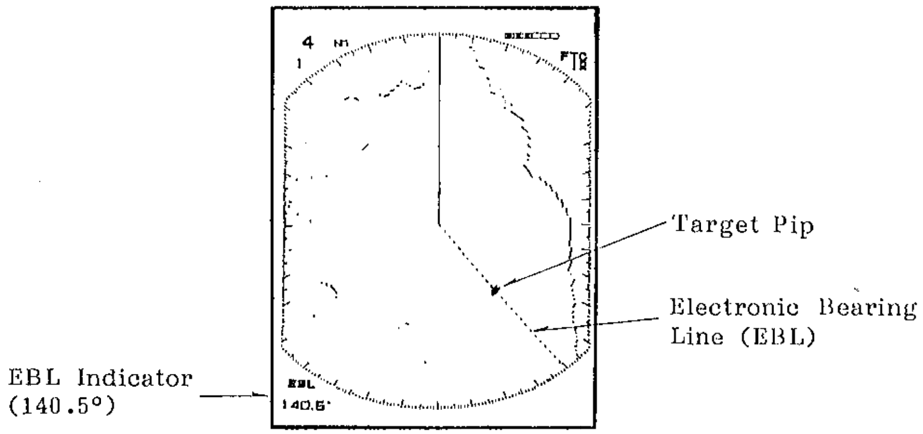

Fig.2-6 Measuring the Bearing of a Target Pip with the EBL

To ensure accurate bearing measurement, keep in mind the following points.

1) Bearing measurements of smaller target pips are more accurate; the center of larger target pips is not as easily identified.

2) Bearings of stationary or slower moving targets are more accurate than bearings of faster moving targets.

3) To minimize errors of bearing you should generally keep echoes in the outer half of the picture by changing the range scale; angular difference becomes difficult to resolve as a target approaches the center of the CRT.

REDUCING OR ELIMINATING INTERFERENCE

Basically there are three types of interference which may hinder radar reception: sea clutter, due to echoes off waves (mentioned earlier); precipitation clutter and interference from other shipborne radars operating nearby and on the same frequency band. This radar can eliminate or reduce these types of interference.

Precipitation Interference

The vertical beamwidth of the scanner is designed to see surface targets even when the ship is rolling. However, this design also has its disadvantages: rain storms, snow, or hail are detected in the same manner as normal targets. Precipitation clutter is easily recognizable by its wool-like appearance on-screen (see Fig.2-7). When this type of interference obscures a large area of the screen, you may use the **FTC** touchpad to eliminate or reduce the interference.

The FTC (Fast Time Constant) circuit works by splitting up these unwanted echoes into a speckled pattern, making recognition of solid targets easier. Because its effect upon the picture is to weaken it, but because it breaks up solid echoes, it also makes for better definition. For this reason, it may be switched on to clarify the picture when navigating in confined waters. However, with the circuit activated the receiver is less sensitive, weaker echoes may be missed. Therefore, deactivate the circuit when no interference exists. Press the **FTC** touchpad and you will see the indicator "FTC" appears at the upper-right hand side of the display screen. The circuit is switched off by pressing the touchpad again.

(A) rain squall, FTC "OFF" (B) FTC circuit "ON", interference reduced

Fig.2-7 Precipitation Interference

Radar Interference

Radar interference may occur when in the vicinity of another shipborne radar operating in the same frequency band. It usually is seen on the display screen as a large number of bright dots either scattered at random or in the form of dotted lines extending from the center (or the edge) to the edge (or the center) of the display screen. Fig.2-8 illustrates interference in the form of curved spokes. Interference effects are easily distinguished from normal echoes because they do not appear in the same place on successive rotations of the scanner.

This type of interference is reduced by activating the Interference Rejector circuit. Press the **IR** touchpad to activate the circuit, and you will see the indicator "IR" appears at the upper right-hand side of the screen. Press the touchpad again to switch off the circuit when no interference exists, otherwise weaker targets may be missed. Note that the IR circuit is defaulted to on when turning on the power.

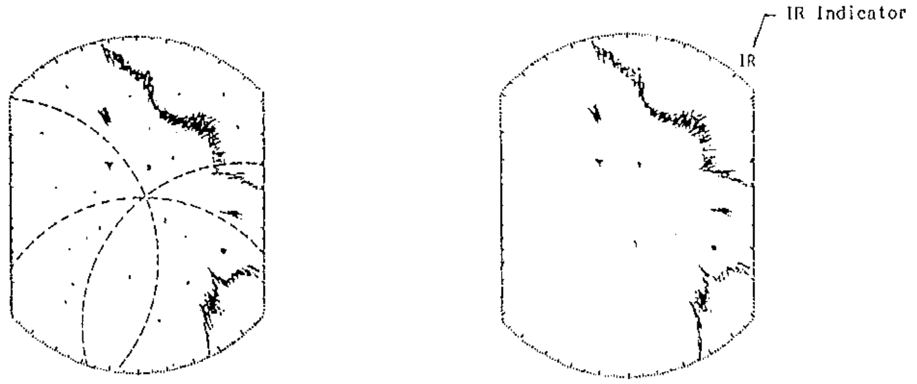

(A) radar interference, IR circuit "OFF" (B) IR Circuit "ON", interference reduced

Fig.2-8 Radar Interference

BETTER DISTINCTION OF ECHOES

As a general rule of thumb, the reflected echoes from long distance targets are displayed on the screen as weaker and smaller blips even though they are compensated by the radar's internal circuitry.

The **ES** touchpad, which stands for Echo Stretch, is provided to magnify small blips in middle and long ranges, i.e., 1 to 24 mile ranges. Now press the **ES** touchpad. You will see the indicator "ES" appears at the upper right-hand side of the screen, and the echoes are doubled lengthwise. Note that this function is inactive on the 0.25 and 0.5 mile ranges.

Press the touchpad again to turn off this function.

SETTING/DELETING THE ALARM

The alarm function allows the operator to set the desired range (0 to maximum range) and bearing (0 to 360°, or 90° sector) for a guard zone. Should ships, islands, landmasses, etc. come into the guard zone an alarm will be generated. The alarm is very effective as an anti-collision aid when using an autopilot or navigating in narrow channels.

Although the alarm is useful as anti-collision aid, it does not relieve the operator of the responsibility to watch out for possible collision situations. The alarm should not be used as a primary means to detect possible collision situations.

Now the procedure to set the alarms.

Procedure

Before setting the alarm ensure the gain is set properly because the audible alarm is triggered when the third or forth level quantization echoes come into the guard zone.

1. Press the **GUARD** touchpad once. The indicator "ALARM" (framed with a white light) appears on the upper right-hand side of the screen and a 360° doughnut-shaped guard ring is displayed (Fig.2-9②). Table 2-2 shows the initial guard area to be displayed.

Table 2-2 Guard Zone Displayed When Pressing **GUARD** touchpad

Range (nm)	0.25	0.5	1	2	4	8	16	24
Zone Width (nm)			0.25	0.5				
Outer range of circle zone (nm)			1	2	4	8	16	24

2. The distance to the guard zone may be changed by the +/− touchpad. See Fig.2-9③. If you want to set a 90° sector alarm, 45° on either side of the heading mark or the EBL, proceed to step 3.

3. Press the **GUARD** touchpad again and the guard zone changes to a 90° fan-shaped sector, bisected by the heading mark. See Fig.2-9④-a.

4. If you want to change the guard zone location, press the **EBL** touchpad followed by +/− touchpads to set the EBL on the bearing desired for the center of the guard zone. See Fig.2-9⑤-a.

5. Press the **GUARD** touchpad and the guard zone drawn up in step 4 is brought up on the screen (Fig.2-9④-b.).

6. Any ships, islands, landmasses, etc. coming into the guard zone will trigger the alarm, telling the operator to proceed with caution. If the alarm sounds, you may press the **ALARM/RESET** touchpad to stop the alarm. Now press the **ALARM/RESET** touchpad. The indicator "ALARM" on the screen changes to "ALM. RESET" indication, while the guard zone remains on the screen.

7. Press the **ALARM/RESET** touchpad again to restore the alarm sound.

8. Press and hold the **GUARD** touchpad for two to three seconds to cancel both the guard zone and the alarm sound.

Note 1: When "RANGE UP" indication appears instead of "ALARM" or "ALM. RESET" indication at the upper right-hand side of the screen, select a higher range to display the guard zone on the screen.

Note 2: A target echo does not always mean a landmass, reef, ships or surface objects but can imply returns from sea surface or precipitation. As the level of these returns varies with environment, the operator is required to properly adjust the A/C SEA (anti-clutter sea), FTC (anti-clutter rain) and GAIN to ensure that target echoes within the guard zone are not overlooked by the alarm system.

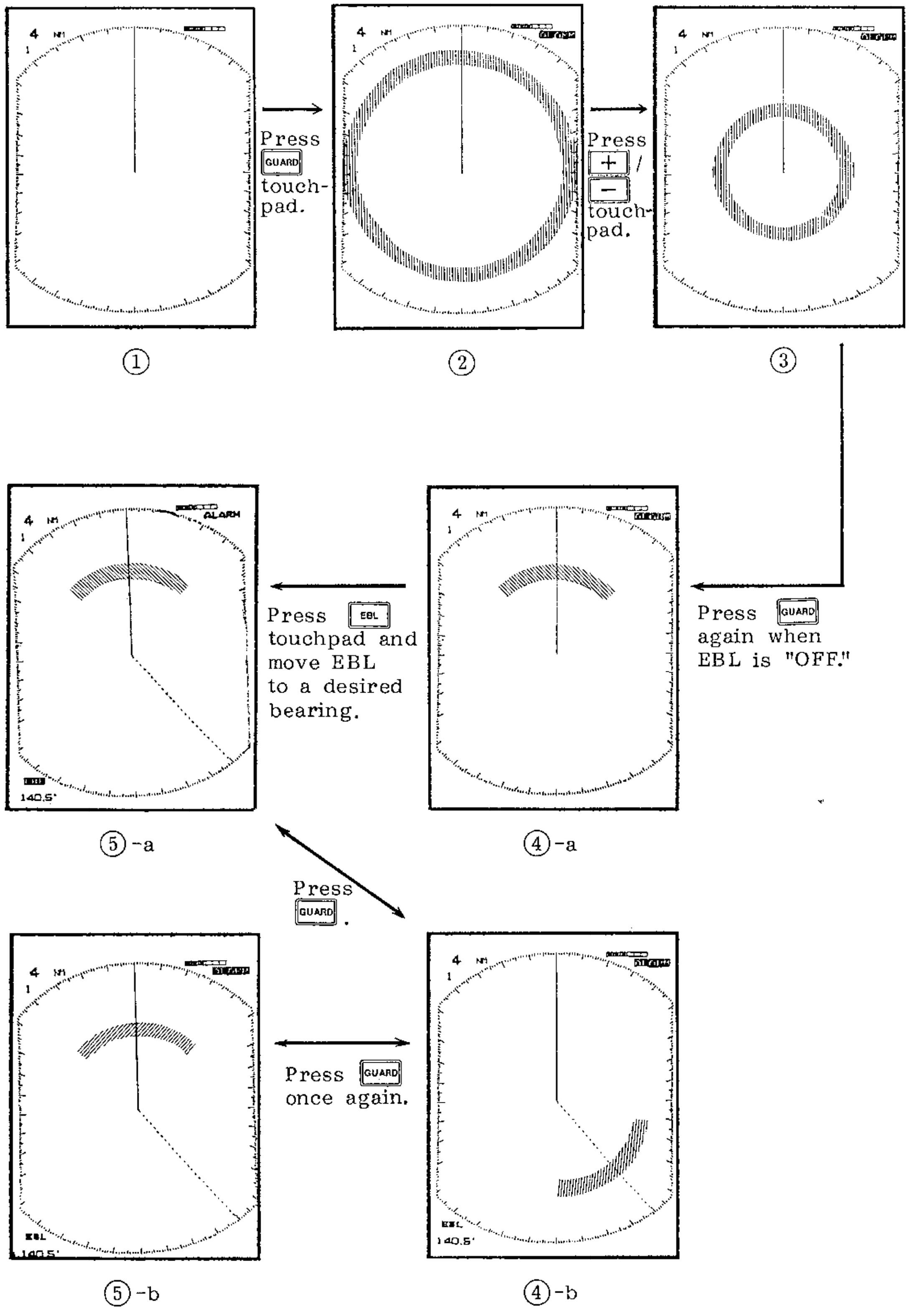

Fig.2-9 Setting the Alarm

INDICATION OF L/L DATA (OPTION)

If an external Loran-C or GPS navigator having NMEA 0183 output format is connected, L/L data, i.e., own ship's position in latitude and longitude, may be displayed at the lower center of the screen by pressing the **L/L** touchpad.

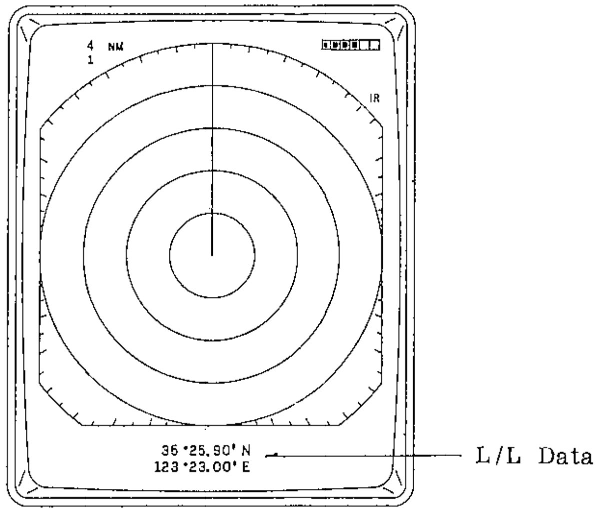

Fig.2-10 L/L Data on the Screen

Press the touchpad again to cancel the L/L indication.

Note:When the output format of an external navigator is not NMEA 0183 but FURUNO CIF format, it is necessary to change DIP switch DSP1 #4 setting to "OFF" and to connect a jumper wire to JMP5 on PROCESSOR board SPU-7109.

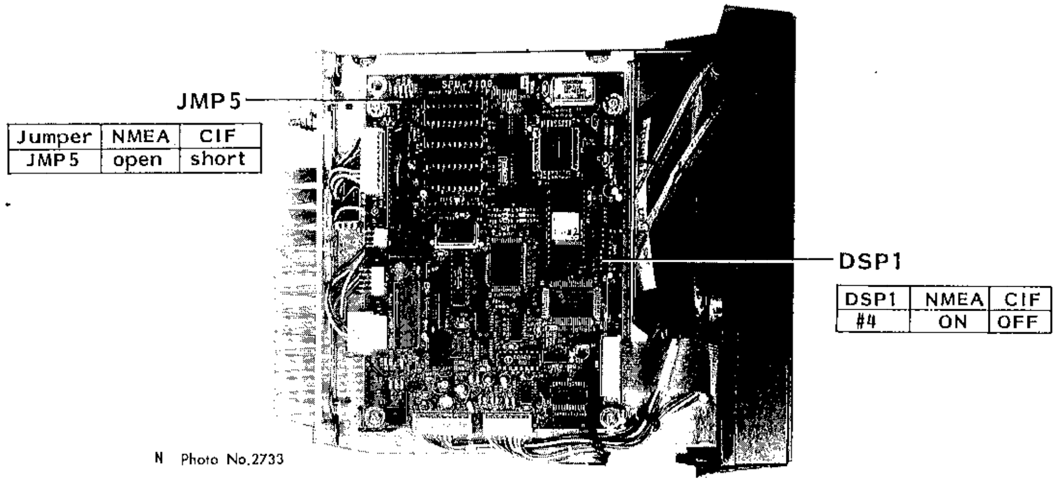

Fig.2-11 SPU (PROCESSOR) Board

3. APPLICATION

As an aid to navigation, radar can be a very valuable tool. No other navigation aid can give you the ability to spot vessels coming at you in the fog, or tell you the location of the inlet to the harbor in the pitch black of night. To help you understand better what your radar can and cannot do for you this section covers the characteristics and limitations of radar, picture interpretation, position fixing with radar and aids to navigation.

FACTORS AFFECTING MINIMUM RANGE

Targets disappearing from the screen when at close ranges can be dangerous. For this reason, detection of targets at short ranges is very important. Minimum range is determined primarily by transmitter pulselength. The shorter the transmission time, the sooner the return echoes can be received and their distance measured. This radar automatically determines the pulselength for both short and long ranges, for optimal detection of targets at short as well as long range.

Sea Return

Sea clutter echoes received from waves may hamper detection of targets beyond the minimum range set by the pulselength and recovery time. (Recovery time is the time required for the receiver to recover to half sensitivity after the end of a transmitted pulse, so it can receive a return echo.) Proper adjustment of the A/C SEA control may alleviate some of the problem.

Vertical Beamwidth

The ability to see targets very close to the boat is decreased if the antenna is mounted too high off the water, since the bottom of the vertical beam of the scanner cuts off nearby targets. Fig.3-1 illustrates the effects of a scanner mounted too high off the water.

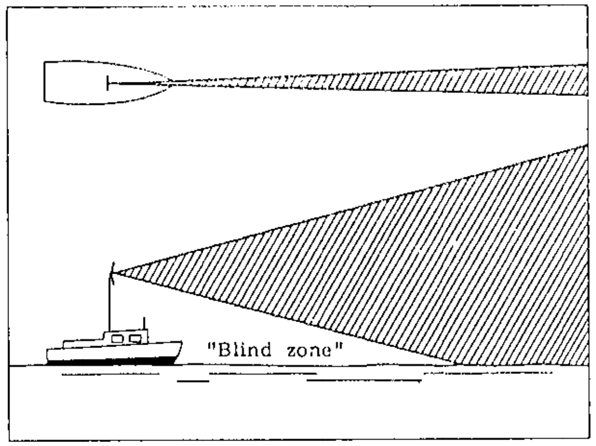

Fig.3-1 Effects of a Scanner Mounted too High off the Water

FACTORS AFFECTING MAXIMUM RANGE

It is nearly impossible to state that a radar has a maximum range. The maximum range a radar will "see" is dependent on many factors, not just the range marked on the screen. Not only does the sensitivity of the receiver and power of the transmitter but also the height above the water of both the scanner and target, the size, shape and composition of the target, and atmospheric conditions contribute to increase or decrease the maximum detectable range.

Radar Horizon

Radar is by its very nature essentially a "line-of-sight" phenomenon. That means that you have just about the same range to the horizon with a radar as you do with your own eyes. However under normal atmospheric conditions, the radar horizon is 6% greater than the optical horizon. Therefore, if the target does not rise above the horizon the radar beam cannot be reflected from the target.

Just as you can see a low-to-the-water speedboat only up relatively close to your boat, the radar can see a target high off the water farther than it can see an object which is close to the water. Further, the higher the antenna is mounted over the water the farther it is capable of seeing other targets. However a possible negative effect with mounting the antenna too high off the water is that due to the finite vertical beamwidth of the scanner, the amount of sea clutter due to reflections from nearby waves is increased to a greater distance from the boat.

Thus it is not at all uncommon to see a 3000 foot high mountain 50 miles away (provided the radar has a 50nm detection capability), while at the same time being only able to see a small power boat 3 or 4 miles away. (See Fig.3-2.)

The distance to the horizon from the scanner, under normal conditions, is calculated by the following formula.

$R_{max} = 2.2 \times (\sqrt{h1} + \sqrt{h2})$

Where Rmax: Radar horizon (mile), h1: Antenna height (meters), h2: Target height (meters)

For example, to find the distance to the horizon in Fig.3-2, if the antenna height is 8 meters (26 feet) and the target height is 15.2 meters (50 feet) the maximum range is (when the cliff begins to appear on the radar),

$R_{max} = 2.2 (\sqrt{8} + \sqrt{15.2}) = 14.8$ miles.

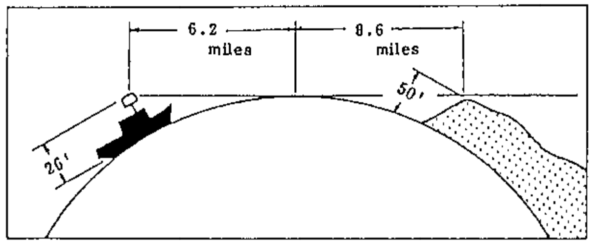

Fig.3-2 Radar Horizon

Target Properties

As a general rule of thumb, larger targets can be seen on the radar display at greater ranges, provided line-of-sight exists between the scanner and target. However, a large target with poor reflecting properties may not be detected as easily as a smaller target with better reflecting properties.

Since one of the main functions of radar is to detect other ships, the composition of a target ships' hull affects the detection range. A ship whose hull is made of conducting materials, such as a steel, return relatively strong echoes.

On the other hand, hulls made from wood or fiberglass return much weaker echoes.

Vertical surfaces, such as a cliff, are good targets provided they face the radar. Inversely, horizontal and smooth surfaces such as mudbanks, sandy beaches, and gently sloping hills make poor targets because they disperse rather than reflect most of the energy that strikes them.

The strongest radar echoes known come from built-up areas, docks, etc., because these targets are less subject to changes in aspect. These types of targets have three flat, smooth surfaces mutually at right angles. This type of arrangement is used on some radar buoys to increase their detection range.

INTERPRETING THE DISPLAY

In the previous section some of the characteristics and limitations of radar were discussed. Now its time to take a look at what you can expect to see on the radar screen. What shows up on the screen isn't likely to match exactly what is seen on a navigation chart. A radar cannot see through a mountain in the path between your boat and the harbor, nor can it see a small boat directly behind a large ship, since both the mountain and the larger vessel effectively shield the radar from the desired target.

To aid you in target identification, the echoes appearing on the display are quantized in four levels, according to their intensity. The brightest intensity echoes are probably from steel ships, or piers, or other "good" targets. Poor targets, for example wooden boats, appear in the weakest intensities.

The ability to interpret a radar picture comes through practice and experience. Practice should be done during clear weather in daytime, since you can compare the picture with what you actually see around you. Go to an area you are familiar with and compare the way coastlines, buoys and other targets are displayed on the screen and the way they are drawn on a navigation chart. To observe the movement of an echo in relation to your position, try running your boat at various speeds and headings.

LAND TARGETS

Landmasses are readily recognizable because of the generally steady brilliance of the relatively large areas painted on the display. Knowledge of the ship's navigational position will also tell you where land should be. On relative motion displays (this radar), landmasses move in directions and at rates opposite and equal to the actual motion of your own ship. Various factors such as distortion from beamwidth and pulselength make identification of specific features difficult. However, the following may serve as an aid to identification.

1) High, steep, rocky and barren landmasses provide good reflecting surfaces.
2) Low, vegetation covered lands make poor radar targets.
3) Submerged objects do not produce echoes.
4) Mud flats, marshes, sandspits, and smooth, clear beaches make poor targets because they have almost no area that can reflect energy back to the radar.
5) Smooth water surfaces such as lagoons and inland lakes appear as blank areas on the display--smooth water surfaces return no energy.
6) Although you might expect an object as large as a lighthouse to be a good radar target, in actuality the return echo is weak since the conical shape diffuses most of the radiated energy.

SHIP TARGETS

A bright, steady, clearly defined image appearing on the display is in all likelihood the target pip of a steel ship. There are several clues which can aid you in identification of a ship. Check your navigational position to overrule the possibility of land. Land and precipitation echoes are much more massive in appearance, whereas the target pips of ships are relatively small. The rate of movement can eliminate the possibility that the pip is an aircraft.

A target pip may brighten and become dim due to changes in aspect, etc. In most cases however a pip will fade from the display only when the range becomes too great.

ECHO SIZE

As the radar beam rotates, the painting of the pip on the display begins as soon as the leading edge of the radar beam strikes the target, and continues until the trailing edge of the beam is rotated beyond the target. Thus, a target cannot appear less wide than the beamwidth. As the beam widens with distance from the scanner, so also will the widths of targets vary on the display. Fig.3-3 illustrates the relationship between beamwidth and the appearance of a target pip.

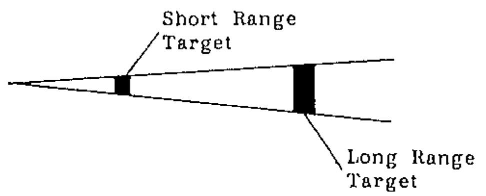

Fig.3-3 Beamwidth vs. Target Appearance

FALSE ECHOES

Occasionally false echoes appear on the screen at positions where there is no target. In some cases the effects can be reduced or eliminated. The operator should familiarize himself with the appearance and effects of these false echoes, so as not to confuse them with echoes from legitimate contacts.

Multiple Echoes

Multiple echoes occur when a short range, strong echo is received from a ship, bridge, or breakwater. A second, a third or more echoes may be observed on the display at double, triple or other multiples of the actual range of the target as shown in Fig.3-4. Multiple reflection echoes can be reduced and often removed by decreasing the gain or properly adjusting the A/C SEA.

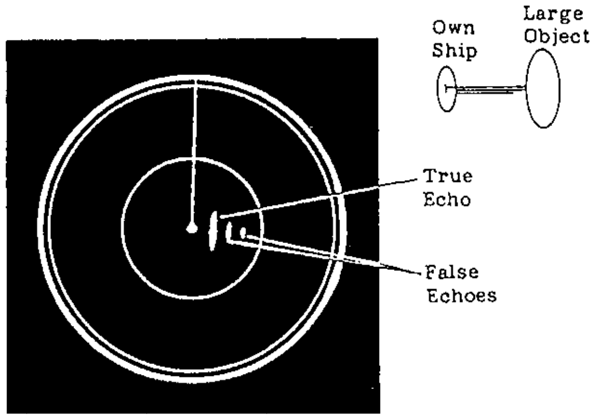

Fig.3-4 Multiple Echoes

Side-Lobe Echoes

Every time the scanner rotates, some radiation escapes on each side of the beam--called "side-lobes." If a target exists where it can be detected by the side-lobes as well as the main lobe, the side echoes may be represented on both sides of the true echo at the same range, as shown in Fig.3-5. Side-lobes show usually only on short ranges and from strong targets. They can be reduced through careful reduction of the gain or proper adjustment of the A/C SEA control.

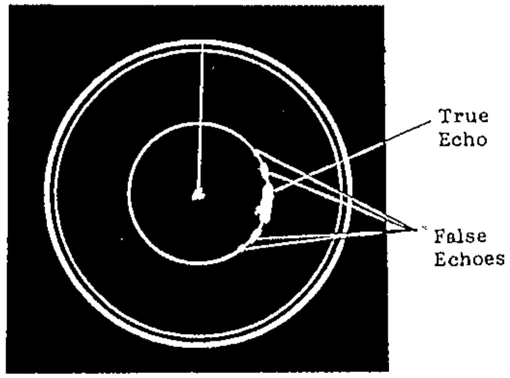

Fig.3-5 Side-Lobe Echoes

Blind and Shadow Sectors

Funnels, stacks, masts, or derricks in the path of antenna may reduce the intensity of the radar beam. If the angle subtended at the scanner is more than a few degrees a blind sector may be produced. Within the blind sector small targets at close range may not be detected while larger targets at much greater ranges may be detected. See Fig.3-6.

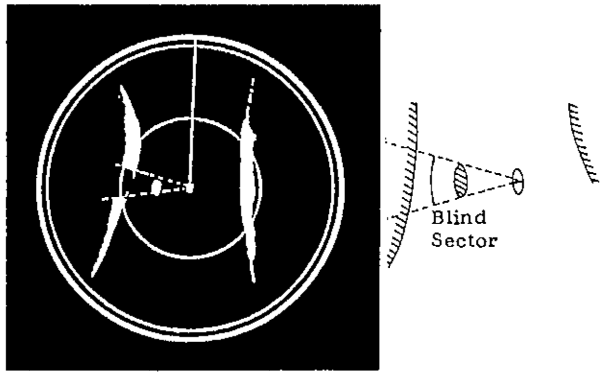

Fig.3-6 Blind and Shadow Sector

Indirect Echoes

Indirect echoes may be returned from either a passing ship or returned from a reflecting surface on your own ship, for example, a stack. In both cases, the echo will return from a legitimate contact to the antenna by the same indirect path. The echo will appear on the same bearing of the reflected surface, but at the same range as the direct echo. Fig.3-7 illustrates the effect of an indirect echo. Indirect echoes may be recognized as follows. (1) they usually occur in a shadow sector; (2) they appear on the bearing of the obstruction but at the range of the legitimate contact; (3) when plotted, their movements are usually abnormal, and (4) their shapes may indicate that they are not direct echoes.

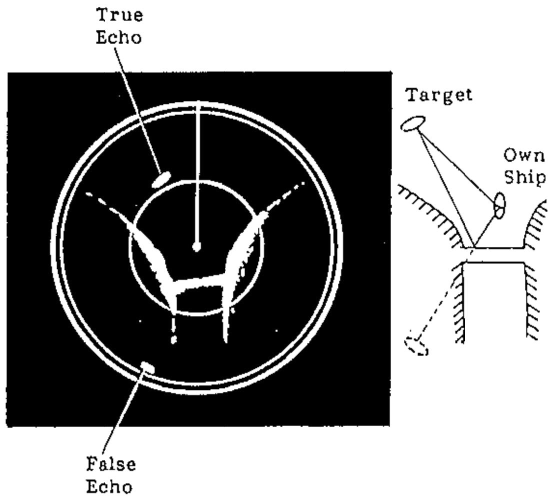

Fig.3-7 Indirect Echoes

RADAR PICTURE AND CORRESPONDING CHART

Under normal conditions, a picture which is very similar to a chart can be obtained on the radar display. The radar picture and corresponding chart shown in Fig.3-8 are from the Kada Inland Sea, south of Osaka Bay, in Southwestern Japan.

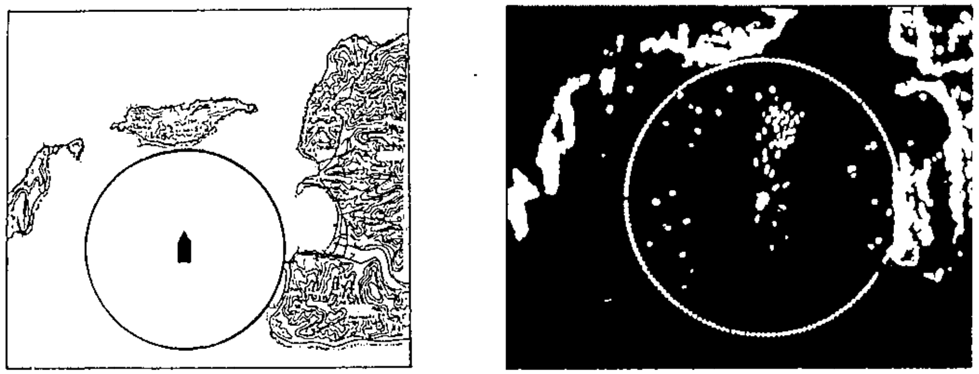

Fig.3-8 Navigation Chart and Corresponding Radar Picture

POSITION FIXING WITH RADAR

Position fixing with radar can be accurate and easy once you become familiar with the different methods. The three most common methods will be discussed in this section. Take a compass, and a navigation chart to try to fix your position while reviewing this section.

By Radar Range

The simultaneous measurement of the ranges to two or more fixed objects is normally the most accurate method of obtaining a fix with radar alone. Preferably at least three ranges should be used. However the use of more than three range arcs may introduce excessive error because of the time lag between measurements, i.e., you will be moving as you take successive measurements.

When obtaining a fix, it is best to measure the most rapidly changing range last because of a smaller time lag in the radar plot from the ship's actual position. For greater accuracy, the objects selected should provide arcs with angles of cut as close to 90° as possible. Small, isolated, radar-conspicuous fixed objects whose associated range arcs intersect at angles approaching 90° provide the most reliable and accurate position fixes. Objects at longer ranges are less accurate for position fixing because they may be below the radar horizon and because the width of the radar beam increases with range.

To fix your position, first, measure the range to two or more prominent navigational marks which you can identify on the chart. (The method for measuring range is found on page 2-7.) Next, with the compass sweep out the ranges from the charted positions. The point of intersection of the arcs is your estimated position. The correct method of position fixing when using radar range is illustrated in Fig.3-9.

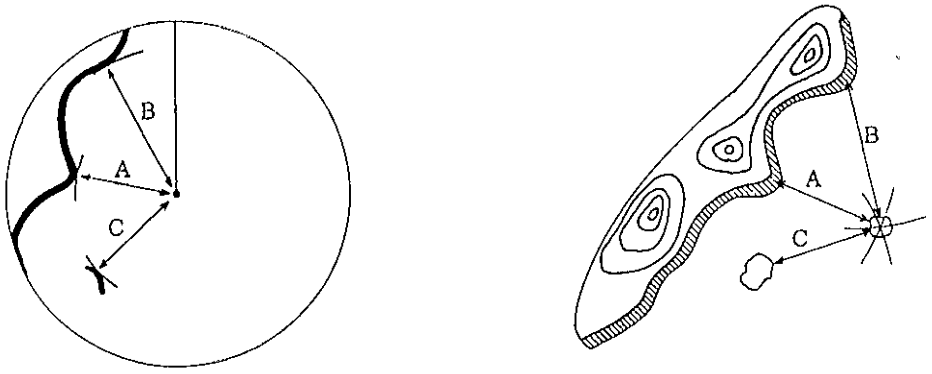

Fig.3-9 Position Fixing Using Radar Ranges

By Range and Bearing to a Point of a Land

The advantage of position fixing by range and bearing to a point of land is the speed with which a fix can be obtained. A distinct disadvantage however is that this method is based upon only two intersecting position lines, a bearing line and range, obtained from two points of land. If possible, the object used should be small, isolated and identified with

reasonable certainty. To fix your position using range and radar bearing, first, measure the relative bearing of the target with the EBL, noting the exact direction of the ship's heading when doing so. Next, make allowance for compass deviation (true or magnetic) and find the true bearing of the target (see page 2-8). Sweep out the range to the target with the compass on the chart and plot the true bearing of the target. The point of intersection is your approximate position. Fig.3-10 illustrates the correct method of position fixing using a range and bearing to a point of land.

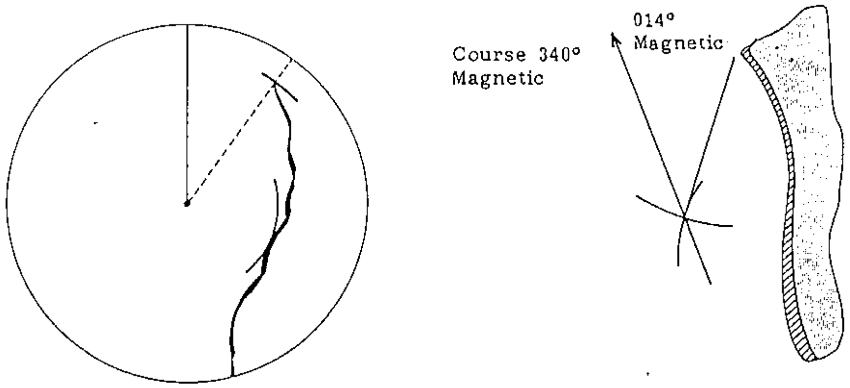

Fig.3-10 Position Fixing Using Range and Bearing to a Point of Land

By Two Bearings

Generally, fixes obtained from radar bearing are less accurate than those obtained from intersecting range arcs. The accuracy of fixing by this method is greater when the center bearings of small, isolated radar-conspicuous objects can be observed. Similar to position fixing using range and bearing, this method affords a quick means for initially determining approximate position. The position should then be checked against other means to confirm reliability.

Position fixing using two bearings is determined by measuring the relative bearings for the two targets and then determining their true bearings. Plot the two bearings on the chart; the point of intersection of the two bearings is your approximate position. Fig.3-11 illustrates the correct method of position fixing using two bearings.

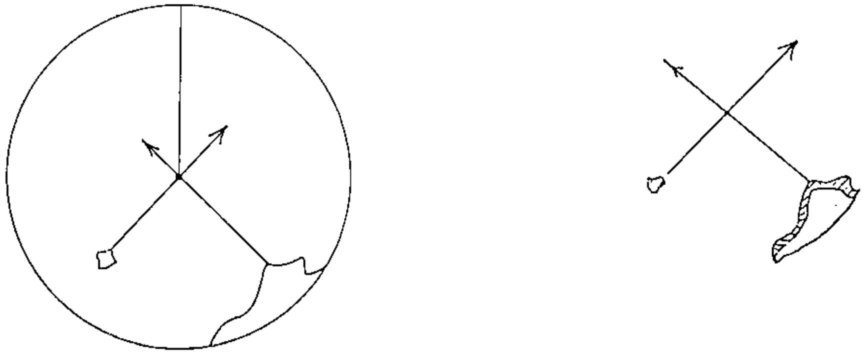

Fig.3-11 Position Fixing Using Two Bearings

COLLISION AVOIDANCE

Collisions at sea sometimes occur because the radar picture doesn't match the information provided by the eye in clear weather and because of the misunderstanding of relative motion.

In a relative motion display your ship is represented by the spot of light fixed at the center of the screen, whatever the speed of your own ship. With both your own ship and the target in motion, the successive pips of the target do not indicate the actual or true movement of the target. If own ship is in motion, the pips of fixed objects, such as landmasses, move on the display at a rate equal to and in a direction opposite to the motion of own ship. Only when your ship is stopped or motionless do target pips move on the display in accordance with their true motion. Fig.3-12 illustrates the relative and true motion of a target contacted by radar.

In Fig.3-12, ship A, at geographic position A1 on true course of 001° at 14 knots initially observes ship B on the PPI at bearing 179° at 4.1 nm. The bearing and distance to the ship changes as ship A proceeds from position A1 to A3. The changes in the position of ship B relative ship A are illustrated in the successive PPI presentations corresponding to the geographic positions of ships A and B. Likewise, ship B at geographic position B1, on true course 25° at 21 knots initially observes ship A on bearing 001° at 4.1 nm.

The radar operator aboard ship A will determine that relative movement of ship B is approximately 66.5°, whereas the operator aboard ship B will determine that the relative movement of ship A is approximately 238°. These figures were obtained using a maneuvering board.

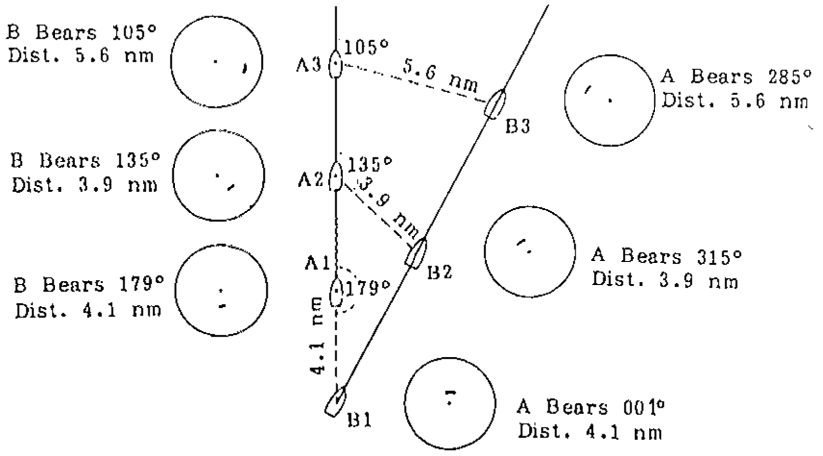

Fig.3-12 Relative Motion vs. True Motion

Assessing the Risk

The moment an echo appears on the screen its range and relative bearing should be measured and its true or magnetic bearing noted. This is best done on a chart or plot. Collision risk can be assessed by carefully watching the true or magnetic bearing of an approaching vessel. If the bearing of the target does not appreciably change a possibility of collision may exist. You should take proper action in accordance with the Regulations for Preventing Collisions at Sea.

AIDS TO NAVIGATION

Various aids have been developed to aid the navigator in identifying radar targets.

RADAR BEACONS

Radar beacons are transmitters operating in the marine frequency band which produce distinctive indications on the radar displays of ships within range of these beacons. There are two classes of beacons: racon and ramark.

Racon

A racon is an omnidirectional transmitter which emits a distinctive signal when triggered by the pulse from a ship's radar. Both range and bearing to the target can be extracted from the signal. Because the beacon's signal travels at the same time as the echo arriving the ship's range to the target can be determined. Since the signal will be received only when the scanner is pointing directly at the beacon, bearing is shown as well as the range and the vessel's position is thus determined. The range and bearing of the racon signal is measured in exactly the same manner as a normal target pip. The racon signal appears on the display as either a radial line originating at a point just beyond the radar beacon or as a Morse code signal displayed radially from just beyond the beacon. See Fig.3-13. Note that with the FTC or IR circuit switched on, the racon marker line may partially disappear.

(A) Coded Racon Signal (B) Racon Signal

Fig.3-13 Racon Signal Appearance

Ramark

A similar type of beacon is known as a ramark. It transmits continuously on a frequency constantly varying so as to sweep through the entire radar band. The ramark signal appears as a radial line from the center of the CRT. The radial line may be a continuous narrow line, a series of dashes, a series of dots, or a series of dots and dashes. Fig.3-14 illustrates the appearance of a ramark signal. Although the ramark flash shows only the bearing to the beacon, if the ramark is mounted on the coast and this can be also seen on the screen, a fix can be obtained from the ramark.

(A) as a dotted line (B) as a dashed line

Fig.3-14 Ramark Signal Appearance

4. MAINTENANCE

GENERAL

Satisfactory operation of the radar depends in large measure on periodic maintenance.

CAUTION
DISCONNECT POWER BEFORE PERFORMING ANY MAINTENANCE PROCEDURES.

1) Keep the equipment as free as possible from dirt, dust and water splashes.
2) Inspect whether the screws securing the components are properly tightened.
3) Inspect the connection at the rear panel.

SCANNER UNIT

Radiator

Wipe the surface of the radiator with a clean soft cloth. Check that there is no dirt or caked salt on the surface. A heavy deposit of dirt or caked salt on the surface of the radiator will cause a considerable drop in radar performance. Do not use chemical cleaners except for alcohol. Also, check for cracks on the surface. If any crack is found, apply a slight amount of sealing compound or adhesive as first-aid treatment, then call for repair. Crack on the surface will cause permanent damage to the internal circuitry due to water leakage. Do not paint the radiator surface.

Mounting

Check for corroded or loosened bolts and nuts. If heavily corroded, replace them with new ones and put slight amount of grease on them.

DISPLAY UNIT

Cleaning the screen

The face of the cathode-ray tube and/or the magnifying lens will, in time, accumulate a coating of dust which tends to dim the picture.

Clean lightly with a soft cloth (flannel or cotton), moistened with alcohol or cleaning fluid if desired. Do not use excess pressure; you may scratch the surface.

Fuse replacement

To protect the equipment from serious damage, a 10A fuse is provided on the rear panel. The fuse protects against overvoltage/reverse polarity of the ship's mains or internal fault of the equipment. If the fuse has blown, first find the problem before replacing it with a new one. A fuse rated for more than 10A must not be used, since it may cause serious damage to the equipment. OVER FUSING WILL VOID WARRANTY.

5. TROUBLESHOOTING

In this section, troubleshooting is arranged in two parts: one for the user and the other for the service shop. "Basic troubleshooting" for user includes simple tests of the equipment which the user can handle, such as operation, installation and visual checks. The "More extensive troubleshooting" is considerably more complicated and must be done by a qualified technician. If something appears wrong with your unit, check the equipment referring to the "Basic troubleshooting." In case the trouble is not found after performing these checks, and the unit still appears to be faulty, call your electronics technician for service.

BASIC TROUBLESHOOTING

In most cases when the unit fails to operate properly the cause is very simple. Before calling for service or sending out the unit for repairs, check the following.

1) Nothing appears on screen

(Check that the front panel is illuminated, and the "ECONOMY" LED lights up. If yes, press the **TX/OFF** touchpad and echoes will appear. If it is still not lit, the trouble may be the unit itself. If the above LED does not light up, check the following.)

*Is the battery dead?
*Is the fuse blown?
*Supply voltage is normal?
*Corrosion on battery terminals?
*Poor contact of power cable?

2) No echo but numerical and character indicators

*Is the antenna plug loose?

3) Low sensitivity

*Is the **GAIN** setting too low?
*Is the **A/C SEA** setting too high?
*Is the **FTC** set to ON?
*Is the **BRILL** set too low?
*Is the receiver detuned? (Coarse TUNE setting wrong.)
*Is the surface of the radiator dirty?

4) Heavy noise

*Is the unit grounded?

5) Sweep not rotating

*Is the **SCANNER** switch turned on?
*Is the antenna plug loose?
*Is the 7-way connector (P/J701) inside the scanner loose?

MORE EXTENSIVE TROUBLESHOOTING

Any replacement of defective parts (except for fuse) should be carried out by a qualified serviceman. The most common troubles you may experience and their possible causes are listed below.

WARNING AGAINST HIGH TENSION

At several places in the unit there are high voltages, enough to kill anyone coming into direct contact with them. Do not change components or inspect the equipment with the voltage applied. A residual charge may exist in some capacitors with the equipment turned off. Always short all supply lines to the chassis with an insulated screwdriver or a similar tool prior to touching the circuit.

Typical Problems/Its Causes (See to pages 5-4 and 5-5 for the parts location.)

1) Nothing appears on CRT.

*CRT assembly
Check if the CRT heater lights up or not. If it is normal, adjust potentiometers R801 ("CONTRAST") on the CRT board and R404 ("BRIGHTNESS") on the Deflection board.

*Defective SPU board (SPU-7109)

2) Scanner does not rotate or rotates too fast/slow.

*Jammed scanner rotating mechanism
*Defective scanner motor (B801)
*Defective motor control circuit on MP board (MP-8070)

3) Picture synchronization is abnormal.

*Defective SPU board (SPU-7109)
*Deflection board of CRT assembly
Adjust potentiometer R510 ("V-HOLD") and coil L601 ("H-HOLD") for horizontal and vertical synchronization, respectively.

4) Sweep rotation is not synchronized with antenna rotation.

*Defective scanner motor (B801)
*Defective MP board (MP-8070)
*Defective SPU board (SPU-7109)

5) Marks and legends appear but no echo nor noise appear.

*Discontinuity or shortcircuit of video signal coaxial cable
*Defective SPU board (SPU-7109)
*Defective IF board (IF-7758)

6) Poor sensitivity

*Deteriorated magnetron (V801)
Refer to "CHECKING THE MAGNETRON" on next page.

*Detuned MIC (U801)

7) Noise appears but no echo.

*Defective MD board (MD-7918)
*Defective IF board (IF-7758)
*Magnetron heater voltage not applied
Refer to "MAGNETRON HEATER VOLTAGE ADJUSTMENT" on page 6-14.

*Defective magnetron (V801)
Refer to "CHECKING THE MAGNETRON" below.

8) Best tuning is not obtained at mid-travel of TUNE control.

*Frequency deviation of the magnetron
Refer to "TUNING & TUNING INDICATOR SENSITIVITY ADJUSTMENT" on page 6-13.

CHECKING THE MAGNETRON (Measuring the Magnetron Current)

The life of the magnetron largely depends on how many hours it is used. Fewer target echoes appear on the screen when the magnetron gets "old." To determine magnetron suitability, use the following procedure to measure the magnetron current.

1. Turn off the **SCANNER** switch located at the rear panel of the display unit to temporarily stop antenna rotation.

2. Connect a multimeter, set to 10VDC range, to pin #5(+) and #6(-) of TP803 on the MD-7918 modulator board. See Fig.5-4.

3. Operate the radar for transmission on 0.25nm range.

4. Confirm that the magnetron current (voltage) is 0.5 to 1.2Vdc. The magnetron current is measured as a voltage.

5. Change the range setting to 24 nm and confirm that the voltage is 0.9 to 1.1Vdc.

If the voltage is far out of the range specified above, the magnetron may be faulty. Never forget to turn on the **SCANNER** switch after checking.

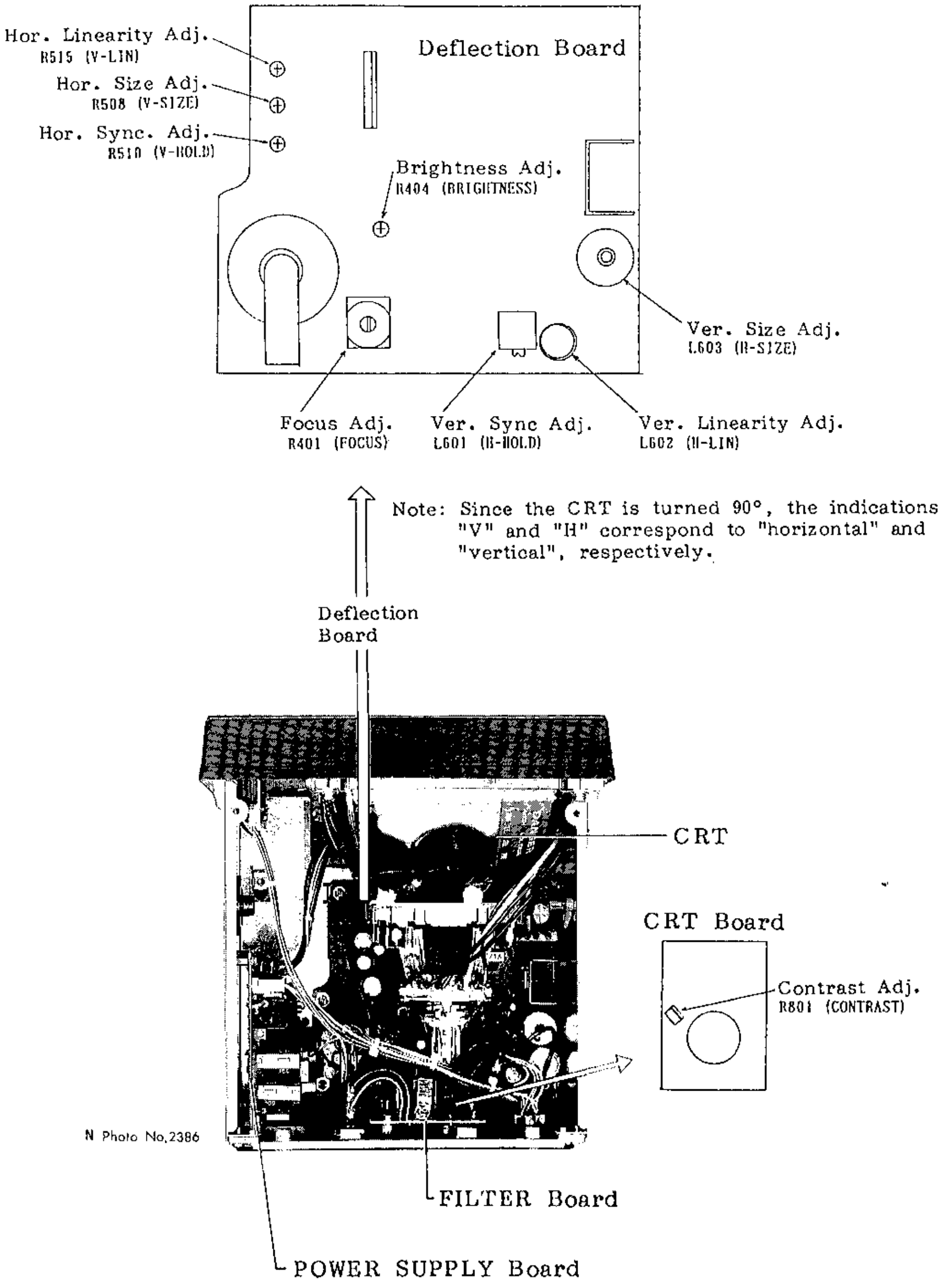

Fig.5-1 Display Unit Top View

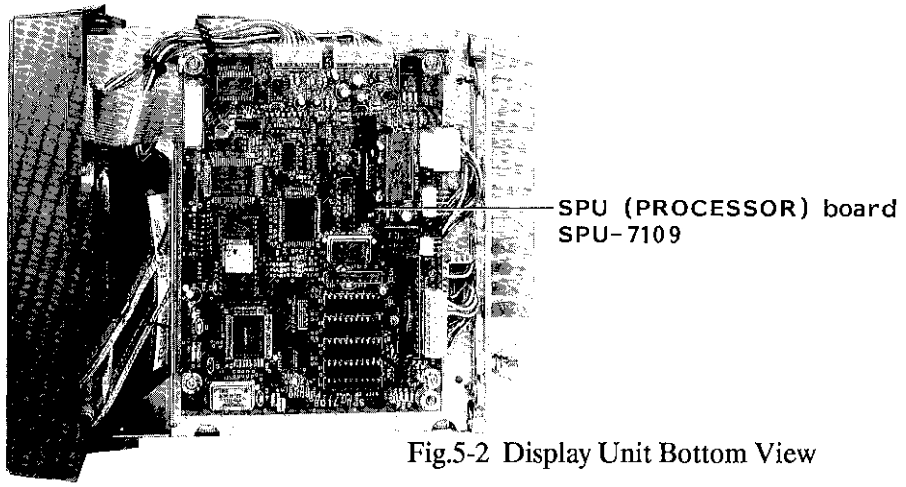

Fig.5-2 Display Unit Bottom View

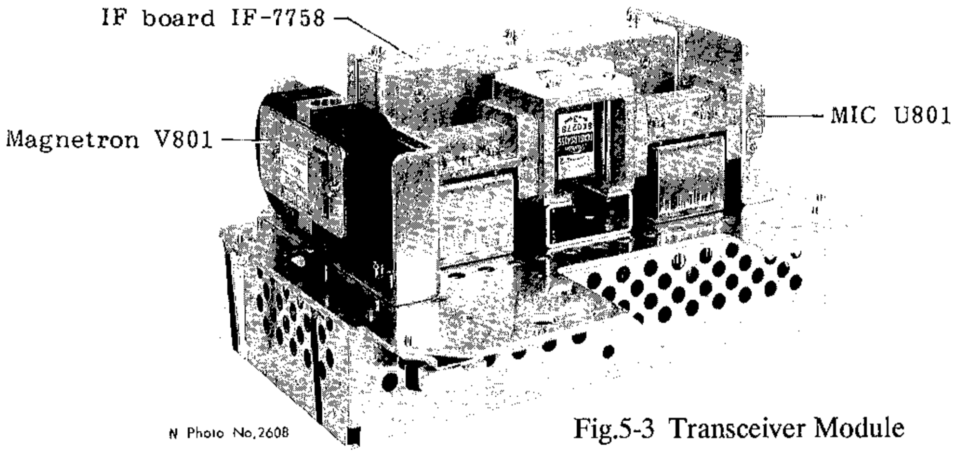

Fig.5-3 Transceiver Module

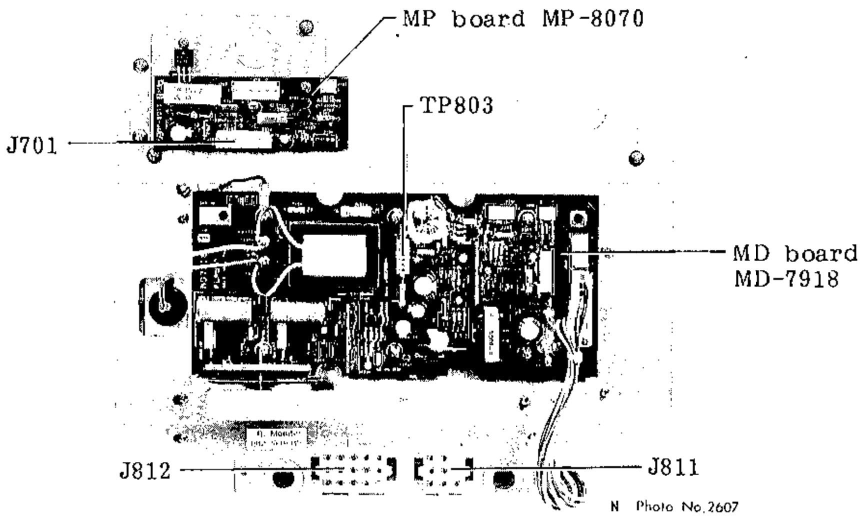

Fig.5-4 Transceiver Module Bottom View
(shield cover removed)

6. INSTALLATION

GENERAL

This radar system is mainly composed of two units; the display unit and the scanner unit, and operates directly from 10.2 to 40.0VDC. When the radar is first unpacked, check that all necessary units, parts and materials are contained. Refer to pages 0-6 and 0-7. The steel and wood works should be arranged locally.

SCANNER UNIT INSTALLATION

Scanner Unit Siting Considerations

The scanner unit is generally installed either on top of the wheelhouse or on the radar mast on an appropriate platform. When siting the unit, consider the following points.

1. The interconnection cable run between the scanner and the display is 10m long. If additional cable is required for a particular installation, an unbroken length must be used (i.e., no splices allowed!), and the maximum length is 30 meters.

2. Any large metallic objects such as funnels, masts or derrick posts around the radar scanner may well block its line of sight, causing blind sectors in the radar picture. The sector directly ahead is obviously most important to the radar operator, so carefully plan the site of the scanner so the forward area is clear of obstructions.

3. Deposits and fumes from a funnel or other exhaust vent can adversely affect the aerial performance and hot gases tends to distort the radiator portion. The unit must not be mounted in a position where it may be subjected to temperatures in excess of 70°C.

4. The compass safe distance, 1.8m (5.90 feet), standard compass and 1.35m(4.42 feet), steering compass, should be observed.

5. The unit must not be positioned in close proximity to a radio direction finder antenna, since the DF would be adversely affected. A separation of more than 2 meters is recommended.

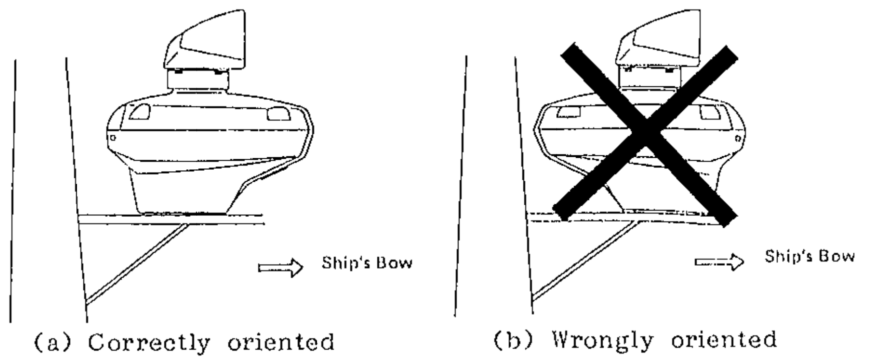

Fig.6-1. Mounting of Scanner Unit

Scanner Housing Mounting

The following procedure must be followed when mounting the scanner unit.

CAUTION

1. As the scanner base is made of cast aluminium, the mounting platform should be painted if it is made of iron, otherwise the scanner might be damaged due to electrolytic corrosion.
2. Do not fail to apply silicone sealant supplied with the radiator to bolts, nuts and washers to make future removal easier.
3. Do not paint the radiator aperture.
4. Do not lift the scanner unit by the radiator.

1. Drill four bolt holes (13mm dia.), one cable entry hole (approx. 50mm dia.) and one vent tube hole (15mm dia.) in the radar mast platform or the deck. See the scanner outline drawing on page D-2.

2. Detach the scanner housing cover from the scanner housing after loosening the four fixing bolts. The scanner housing cover fitted with the transceiver module can be stored in a convenient place until the wirings to the scanner unit are accomplished.

3. Place the scanner housing on the chosen position, and orientate it as shown in Fig.6-1(a).

4. To prevent corrosion, apply silicone sealant to the M12x60 hex. bolts, seal washers, nuts and washers, and secure the scanner housing with them. The bolts must be inserted with their heads facing upward (from inside the scanner housing) so that they do not touch the transceiver module.

Note 1. Do not turn the bolt to secure the scanner housing. It must be fixed by turning the nut. Otherwise the seal washer will be damaged.
Note 2. Take care the direction of the seal washer.
Note 3. Take off the rubber blind on the vent hole, and insert the vent tube. Never apply silicone sealant around the tube.

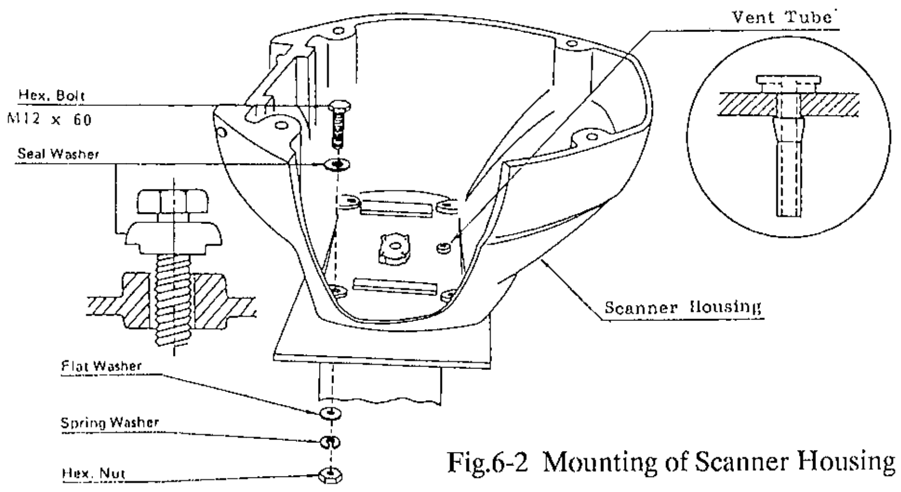

Fig.6-2 Mounting of Scanner Housing

Connections to Scanner Unit

Only the multicore cable runs from the display unit to the scanner unit. A hole at least 20mm (3/4") dia. must be drilled through the deck or bulkhead for cable entry. After the cable is passed through the hole, a sealing compound should be applied to this hole for waterproofing.

In order to minimize the chance of picking up electrical interference, avoid where possible routing the multicore cable near other onboard electrical equipment. Also, avoid running the cable in parallel with power cables.

The procedure for connecting the multicore cable to the scanner unit is as follows.

1. Through a pipe or waterproof cable gland fitted on the wheelhouse top or bulkhead, pass the open end of the cable toward the scanner unit.

2. Remove the cable gland located on the bottom of the scanner housing.

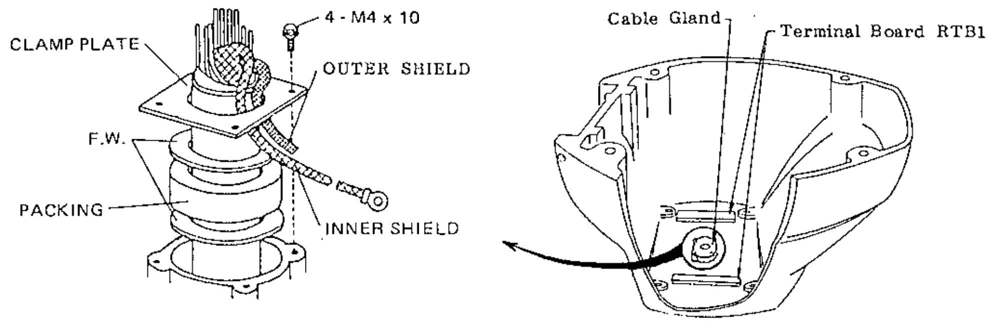

Fig.6-3 Bottom of Scanner Housing

3. Pass the multicore cable through the scanner base and the cable gland (removed in step 2.)

4. Cut the cable leaving about 800mm from the cable gland, and fabricate it referring to Fig.6-4.

5. Tighten the cable gland to the scanner base for complete watertightness. Ground the outer shield of the multicore cable with the clamp plate as shown in Fig.6-3.

6. Connect the lead wires to terminal board RTB1 on the bottom of the scanner housing by referring to the Interconnection Diagram on page S-1.

Note: The inner shield of the multicore cable should be connected at terminal #20 of RTB1.

7. Close the scanner housing cover temporarily.

FABRICATION OF MULTICORE CABLE (SCANNER SIDE)

1. Being careful not to cut the outer shield, remove 500mm of the vinyl sheath. See Fig.6-4(a).

2. Slide washer, rubber packing, washer and clamp plate of the gland over the cable. See Fig.6-4(b).

3. Straighten the outer shield and separate the outer layer wires from those inside the braided shield (inner wires). See Fig.6-4(c).

4. Take out the wires and coaxial wire from the inside layer. See Fig.6-4(d).

5. Mark the wires for identification.

6. Cut each lead wire to a suitable length, considering the distance to respective terminals on RTB1.

7. Remove about 6mm of the vinyl insulation from the end of each wire. Fix crimp-on lug FV1.25-3 (red) to each wire by using a crimping tool. See Fig.6-4(e).

8. Fix crimp-on lugs 320882 (red) and FV1.25-3 (red) to coaxial cable and its shield, respectively.

9. Spread out the inner shield and cut it off leaving about 250mm. Put a vinyl tube or tape over the braided shield and fix crimp-on lug FV5.5-S3 (yellow) on the end of the shield.

10. While holding the wire in one hand pull each crimp-on lug to ensure that the connection is tight.

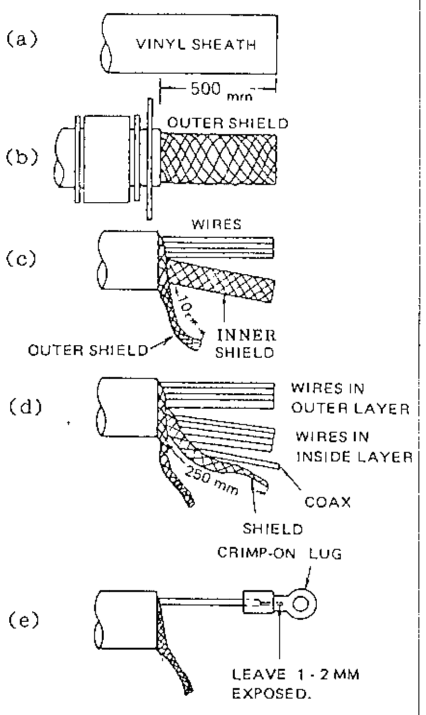

Fig.6-4 Fabrication of Multicore Cable

Final Preparation

To complete the scanner housing mounting, proceed to the following steps.

1. Place the scanner housing cover onto the scanner housing. Apply grease to the rubber packing. Making sure the packing rests properly in the groove, fasten the four fixing bolts temporarily by hand as shown in Fig.6-5.

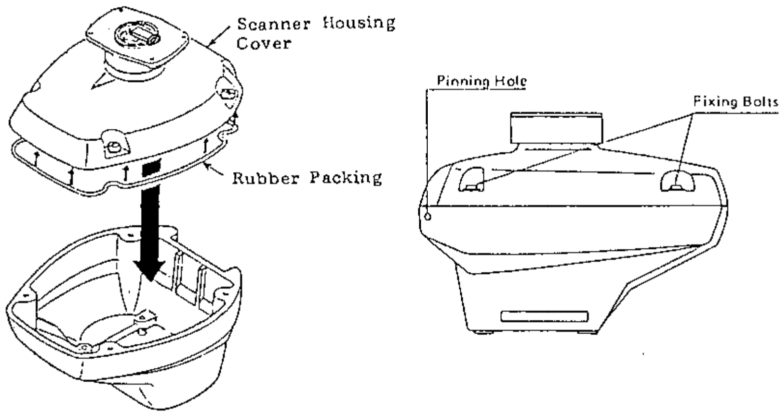

Fig.6-5 Assembling of Scanner Housing

2. Apply grease to the two slot pins and insert them into the pinning holes shown in Fig.6-5 until the pin head becomes flush with the scanner housing surface. It is recommended to use a wooden hammer to avoid damaging the cosmetic paint.

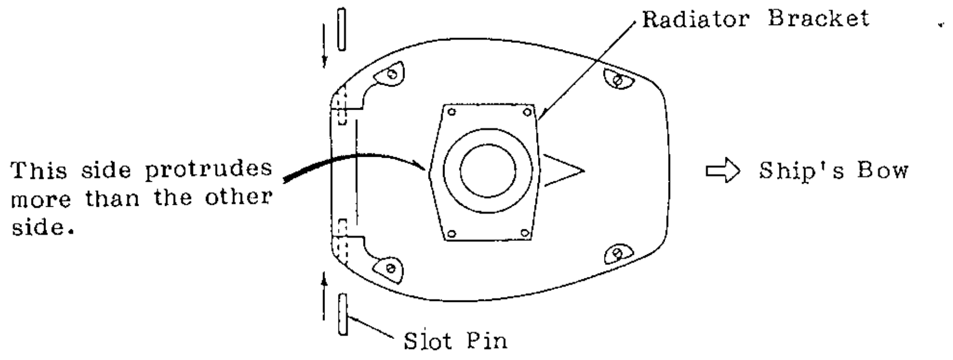

Fig.6-6 Slot Pin Insertion

3. Now is the time to begin the procedure for fixing the radiator to the radiator bracket. Remove the red rubber cap on the radiator bracket and orientate the radiator bracket as shown in Fig.6-6. Referring to Fig.6-7, apply grease to the O-ring and set the O-ring to the center of the radiator bracket. Coat the radiator fixing bolts with silicone sealant. Fix the radiator to the radiator bracket with *the FURUNO logo on the radiator facing ship's bow.*

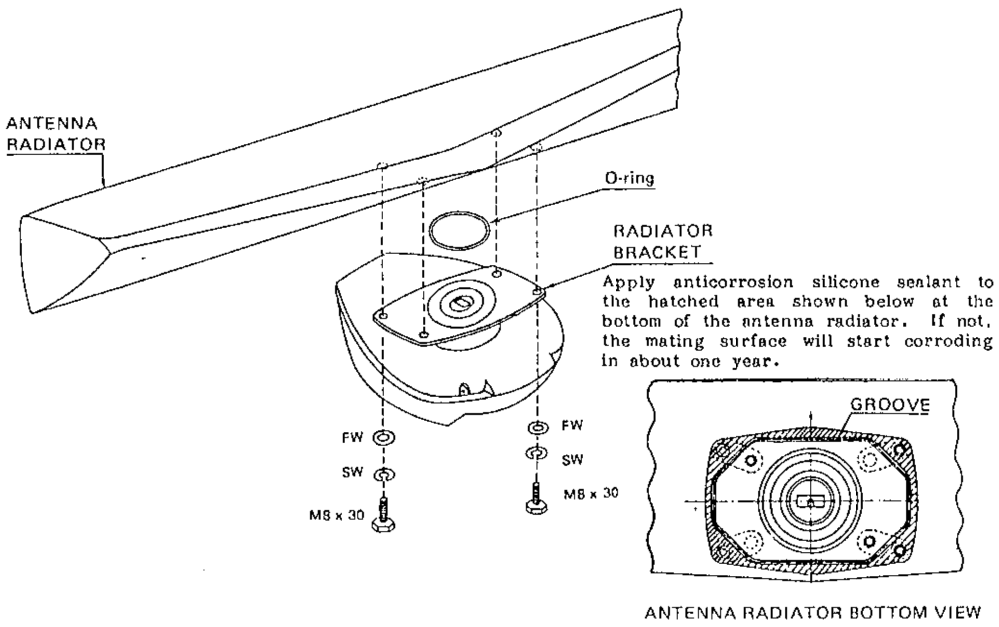

Fig.6-7 Antenna Radiator Mounting

4. Open the scanner housing cover and fix the stay as shown in Fig.6-8. Make the scanner unit internal wiring as the following steps.

5. One end of the cable with 15-, 9-and 7-way plugs has already connected to terminal board RTB1 inside the scanner housing. Mate the 15-and 9-way plugs with jacks J812 and J811 on the transceiver module, respectively. Connect the 7-way plug to jack J701 on the MP board. Note that the cable between RTB1 and J701 should be clamped by the cable tie as shown in Fig.6-8.

6. The black ground wire is provided with the cable mentioned above. Connect the wire to the chassis of the transceiver module with the screw shown in Fig.6-8.

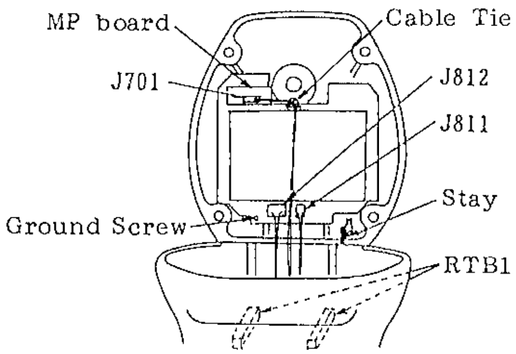

Fig.6-8 Internal Wirings

7. Close the scanner housing cover temporarily by fastening the four fixing bolts, because it may have to be opened again for adjustment after installation.

DISPLAY UNIT INSTALLATION

Locate the display unit in a position where it can be viewed and operated conveniently but where there is no danger of salt or fresh water spray or immersion.

Compass Safe Distance; The magnetic compass may be affected if the display unit is placed too close, because of fields generated in the radar. The compass safe distance (approximately 0.5m (1.64feet) standard compass and approximately 0.4m (1.31feet) steering compass) must not be disregarded.

The orientation of the display unit should be so that the radar screen is viewed while the operator is facing in the direction of the bow. This makes determination of your position much easier.

The display unit is mounted in a trunnion mount. The mount itself can be installed either overhead, on a bulkhead, or on a tabletop. The drawing below gives the recommended clearances and the mounting dimensions for this unit. You can use the mount itself as a template for locating the mounting screw holes. Although the unit is light-weight (4.9kg (10.7 pounds)), reinforce the mounting place, if necessary.

The mounting procedure is:

1. Mark the screw locations by using the trunnion as a template.
2. Drill five pilot holes for the trunnion.
3. Install the trunnion using the screws supplied as the installation materials.
4. Fit the knob bolts, rubber washers and washers to the display unit.
5. Install the display unit in the trunnion. Tighten the knob bolts securely.

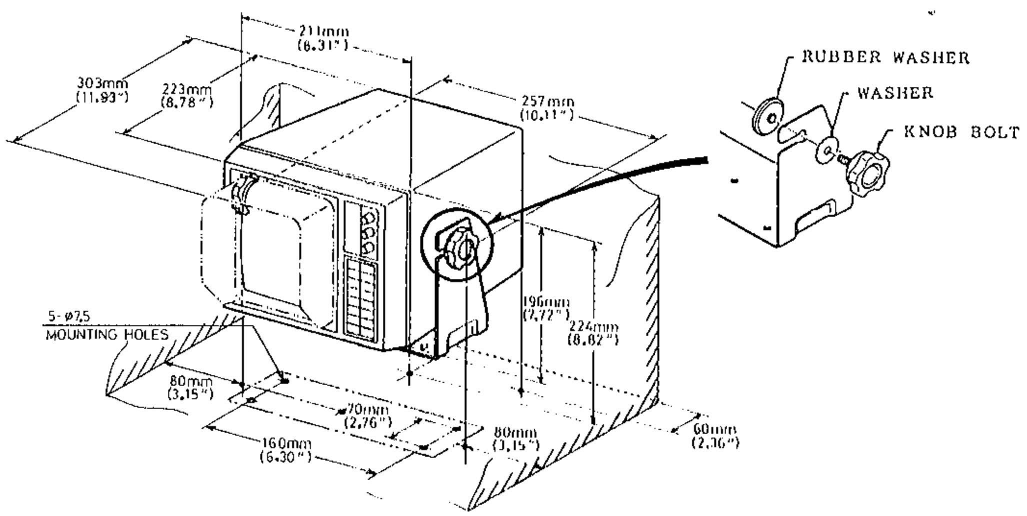

Fig. 6-9 Display Unit Outline Drawing

Make sure you allow enough clearance both to get to the connectors behind the unit and to allow you to get your hands in on both sides to loosen or tighten the mounting knobs. Make sure you leave at least a foot or so of "service loop" of cables behind the unit so that it can be pulled forward for servicing or easy removal of the connectors.

Now comes the wiring part. The only wiring necessary is for power connection, ground connection and the interconnection cable.

Antenna Connection

The interconnection cable from the scanner unit is connected to the back of the display unit.

Power Connection

This radar is designed for 12, 24 or 32 volt battery systems. No internal wiring changes are needed for input voltages from 10.2 to 40.0Vdc. A piece of gear of this quality deserves to have a circuit breaker dedicated to it alone.

Ground Connection

Run heavy duty ground wire from the grounding terminal at the rear panel of the display unit to the nearest grounding point on the boat.

Follow the drawing below for detailed wiring information.

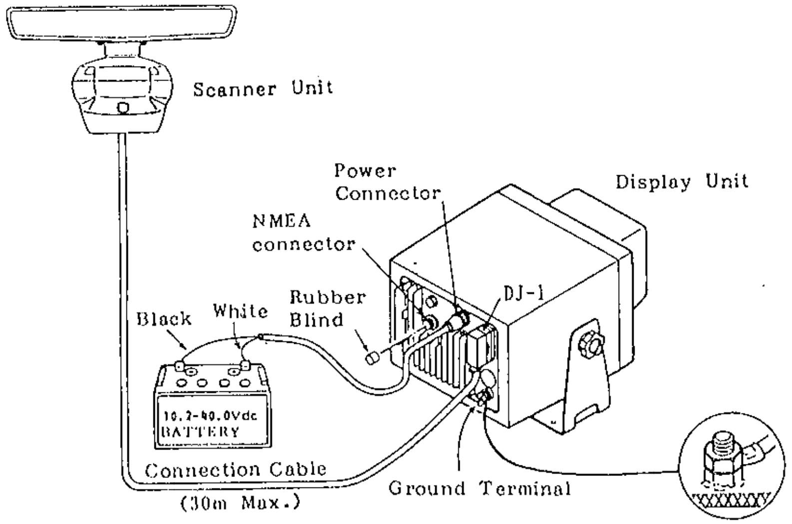

Fig.6-10 Detailed Wiring Diagram

External Navigational Receiver Connection (Option)

If your navigation receiver has NMEA 0183 or FURUNO CIF signal format, the own ship's position in latitude/longitude may be sent to this radar, and be seen in the bottom text area.

An NMEA cable fabricated with a connector is optionally supplied. Remove the NMEA connector cap, and a jack for NMEA 0183 may be seen. Mate the connector with this jack. Fabrication of the other end of the connection cable should be left to a competent service technician, because it is difficult to find the point to be connected.

[For service technician] J1352#1,#2 :No connection
J1352#3 :RD-Hot
J1352#4 :RD-Cold

CHECKING THE INSTALLATION

After completing the installation, it is a good idea to recheck to ensure that all the steps of the installation were accomplished in accordance with the instructions. Use the following check list.

Table 6-1 Installation Check List

Tick here.	Check Item
☐	1) The vent tube on the scanner housing is on the side of the bow direction correctly.
☐	2) Four scanner housing fixing bolts are fully tightened.
☐	3) The connection cable is waterproof at the scanner base.
☐	4) The cable is securely retained against the mast or mounting and is free of interference from running rigging.
☐	5) Check that the cable gland or entry on the deck is waterproof, if provided.
☐	6) The power connections to the battery are of correct polarity.
☐	7) Check that the plugs at the rear of the display are inserted correctly and are secure.
☐	8) Carry out the following adjustment after the above checks.

Now is the time to turn on the unit and carry out the necessary tuning and presetting adjustments.

INITIAL PROCEDURES

1. Press the **POWER/OFF** touchpad on the display unit, and the control panel will light up. In approximately 2 minutes and 30 seconds, the message "ST-BY" will appear at lower center of the screen. While this warmup is in process, pry off the VR panel on the front panel of the display unit. See Fig.6-12. This will expose the preset adjustments. Push in the front panel **TUNE** control and release the control to bring it out. Set the control to 12 o'clock, the **GAIN** control at 2 o'clock, and the **A/C SEA** control at fully counterclockwise.

2. When the screen indicates "ST-BY" press the **TX/OFF** touchpad. The radar will start transmitting on the 4-mile range, and you will probably see a number of targets around you, even though the gain, tuning and other tuning adjustments have yet to be optimized.

3. Bring up the **GAIN** control until a small amount of noise appears on the screen. At this point, unless the tuning just happens to be at the optimum point, *slowly* adjust the coarse "TUNE" control accessible through the VR panel, watching the screen for radar targets. (See Fig.6-12.) You must patiently adjust this coarse-tuning control in very small increments, allowing the sweep to go around completely in order to observe the effect of a single small change in its setting. When you are finished optimizing the coarse tuning control behind the VR panel, verify that the fine **TUNE** control on the front panel peaks up for maximum radar echoes at 12 o'clock, or at least close to that point.

4. Now, while still on the 4-mile range, adjust the **GAIN** control on the front panel, for a little background noise showing on the screen, and then hit the **RANGE** touchpad, followed by four pushes on the **–** touchpad to bring you down to the 0.25-mile range. Without disturbing the front panel **GAIN** control, adjust the **A/C SEA** control until nearby radar targets are clearly shown on the screen. Too much A/C SEA action will eliminate small targets, and too little A/C SEA action will cause the screen to be so full of targets and noise that it is hard to determine which target is which as compared to visual sightings. Note that adjusting the **GAIN** and **A/C SEA** controls in this manner (**GAIN** at long range, **A/C SEA** at short range) will equalize the picture at all ranges, and you will not have to jockey back and forth with the **GAIN** control especially when you change range scales.

RELATIVE BEARING ALIGNMENT

You have mounted the scanner unit facing straight ahead in the direction of the bow. Therefore, a small but conspicuous target dead ahead visually should appear on the heading mark (Zero degree).

In practice, you will probably observe some small error on the display for most installations because of the difficulty in achieving accurate initial positioning of the scanner unit. The following adjustment will compensate for this error. If you don't know how to do it well, it's best you leave this part to a competent service technician.

(Remember that the fixing bolts for the scanner housing cover remain untightened. They should now be secured if the following alignment is not necessary.)

1. Identify a suitable target (e.g., ship or buoy) at a range between 1/8 to 1/4 miles, preferably located on or around the heading mark. To minimize errors of bearing you should generally keep echoes in the outer half of the picture by changing the range scale.

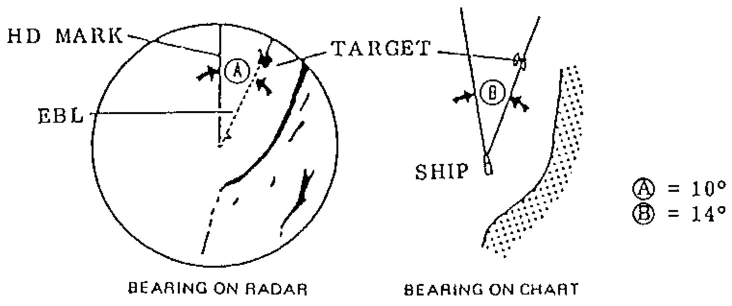

Fig.6-11 Relative Bearing Alignment

(When the relative bearing of a target measured on the radar screenⒶdoes not agree with that measured on the navigation chartⒷ.)

2. Press the **EBL** touchpad to bring up the EBL on the screen.

3. Press either of the + or − touchpad until the EBL lies directly over the target.

4. Read the EBL bearing at the bottom left on the screen.

5. Find the relative bearing to the target from the ship's bow visually, using a pelorus.

6. Compare the bearing measured in step 4 and 5 above, and calculate the direction and magnitude of the bearing error.

7. Open the scanner housing cover and *slightly* loosen the two screws which secure the heading mark key mounting plate. If the screws are loosened excessively, fine adjustment will be more difficult.

8. Adjust the position of the heading mark key, moving to the aft (or fore) direction if the bearing "A" is greater (or smaller) than "B", respectively.

9. After adjustment, tighten the heading mark key fixing screws securely.

10. Close the scanner housing cover and tighten the four fixing bolts securely.

11. As a final test, move the boat towards a small buoy and ensure that the buoy shows up dead ahead on the radar when it is visually dead ahead.

SWEEP TIMING ADJUSTMENT

This adjustment is carried out to ensure proper radar performance, especially on short ranges. The radar measures the time required for a transmitted echo travel to the target and return to the source, and the received echo is displayed on the CRT based on this time. Thus, at the instant the transmitter is fired, the "Sweep" should start from the center of the CRT (sometimes called sweep origin).

A "trigger" pulse generated in the display unit is sent to the scanner unit through the interconnection cable to trigger the transmitter (magnetron). The time taken by the signal to travel up to the scanner unit varies, depending largely on the length of interconnection cable. During this period the display unit should wait before starting the sweep. When the display unit is not adjusted correctly, the echoes from a straight local object, e.g., a harbor wall, straight pier, etc. will not appear with straight edges -- i.e., they will be seen as "pushed out" or "pulled in" near the picture center. The range of objects will also be incorrectly shown. Therefore, the following adjustment should be carried out after installation.

Procedure

1. Set the unit at 0.25 nm range and adjust the **GAIN** and **A/C SEA** controls properly.

2. Visually, select a straight object, e.g., a harbor wall, straight pier, etc.

3. Adjust the "TIMING" potentiometer (VR4) so that a straight object will appear straight with no "pushing" or "pulling" near the picture center.

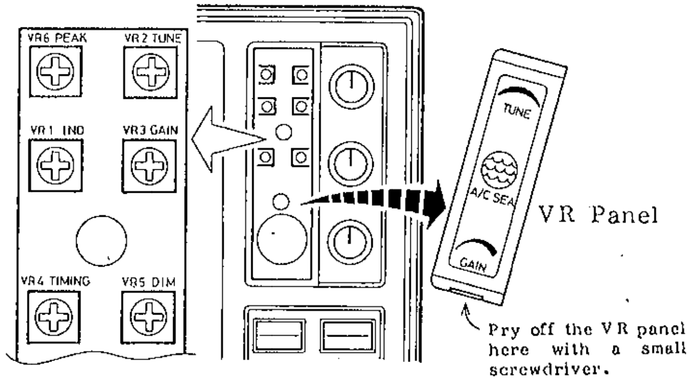

Fig.6-12 Location of Preset Potentiometers

(A) improper, pulling inward (B) proper (C)improper, pushing outward

Fig.6-13 Sweep Timing Adjustment

PRESET GAIN ADJUSTMENT

Preset gain is preadjusted at the factory. However if the receiver gain is too high or low, adjust it again.

Procedure

1. Set the controls: **RANGE** : 24 nm; **GAIN**: fully CW (max.); **A/C SEA**: fully CCW (min.); **FTC** : off, **ES** : off and **IR** : on.
2. Set VR3 at the position where a little background noise appears on the screen. See Fig.6-12 for the location of VR3.
3. Confirm that the noise increases when the IR circuit is not activated. (**IR** touchpad: OFF)

TUNING & TUNING INDICATOR SENSITIVITY ADJUSTMENT

Tuning and its indicator sensitivity are preadjusted at the factory. However if the best tuning condition is not obtained with the **TUNE** control set at its mid-travel, execute the following procedure.

Procedure

1. Transmit the radar on maximum range (long range) with the **TUNE** control set at its mid-travel and wait about 10 minutes for magnetron oscillation to stabilize.
2. Adjust potentiometer VR2 ("TUNE", Fig.6-12), located behind the VR panel of the display unit, so that a comparatively weak long range echo is discerned with maximum definition.
3. Adjust potentiometer VR6 ("PEAK", Fig.6-12) for the maximum number of tuning bars.
4. If all the tuning bars light up, turn potentiometer VR1 ("IND", Fig.6-12) CCW so that about four bars light up, and then adjust VR6 ("PEAK") as in step 3.
5. Adjust VR1 ("IND") so that the fifth tuning bar lights up.

PANEL ILLUMINATION ADJUSTMENT

The illumination of the touchpad panel can be adjusted to suit your needs, by adjusting the "DIM" potentiometer (VR5) located behind the VR panel of the display unit. See Fig.6-12 for the location of VR5.

MAGNETRON HEATER VOLTAGE ADJUSTMENT

Magnetron heater voltage is formed at the MD board of the scanner unit and preadjusted at the factory. Therefore no adjustment is required even though the cable length between the display unit and the scanner unit is changed. Execute the following procedure to confirm.

Procedure

1. Suspend the antenna rotation by turning off (downward) the **SCANNER** switch located at the rear panel of the display unit.
2. Connect a multimeter, set to 10VDC range, between #4 (+) and #6 (–) of test point TP803 on the MD board. See Fig.6-17(b).
3. Confirm that the multimeter shows 7.5V $\pm$ 0.1V. If not, adjust potentiometer VR801 on the MD board. See Fig.6-17(b).

Never forget to turn on (upward) the **SCANNER** switch after adjustment.

MEASUREMENT OF BLIND SHADOW SECTORS

In some shadow sectors, it should be remembered that there may not be sufficient intensity to obtain an echo from very small targets even at close range, despite the fact that a large vessel may be detected at a much greater range in non-shadowed sectors. For these reasons the angular width and relative bearing of any shadow sectors should be determined. This section describes how to do this. In the case of a new vessel this should be done during sea trials. In other ships it should be done at the first opportunity after fitting a new radar set.

It should be realized that even a small shadow sector may hide another vessel if she is on a collision course. The bearing will remain constant in the shadow area and the approach of the other vessel may remain undetected until it is too late to avoid a dangerous situation.

Two methods of determining the angular width of a shadow sector are;

1) Turn the boat very slowly through 360° while a small but clearly defined target is observed at a distance of a mile or so. (Do not use a buoy with a reflector as this target is too powerful to achieve the required result.)

   If the echo disappears while the boat is turning, the target has entered a shadow sector and it will again become visible when the target emerges from the shadow. Very quiet conditions of wind and sea are essential to ensure reliable results when this operation is carried out on a small craft since a rough sea can cause a buoy to be lost in the clutter or to be temporarily submerged or hidden by waves. An unsteady movement may cause the boat to swing through a shadow sector before the scanner has completed one revolution. In any case an average of several observations of each shadow sector should be taken. It is a waste of time to attempt the operation in anything other than very smooth water with little wind.

2) Another method is to observe the shadow sector against a background of sea clutter. Any shadows will show as dark sectors in the clutter. See Fig.6-14.

Note that a shadow cannot be fairly estimated in heavy clutter, as echoes from either side of the sector may be spread into it and give an illusion that objects in the sector are being observed. Nor can it be satisfactorily determined in confined waters, because of the probability of indirect, false or multiple echoes being produced from nearby buildings or other vessels.

Fig.6-14 Appearance of a Shadow Sector on the Display Screen

The result of the above measurement should be recorded on a blind shadow sector diagram. Fig.6-16 is an example of a shadow sector diagram for the scanner unit sited as in Fig.6-15. The blind shadow sector diagram should be fixed near the display unit.

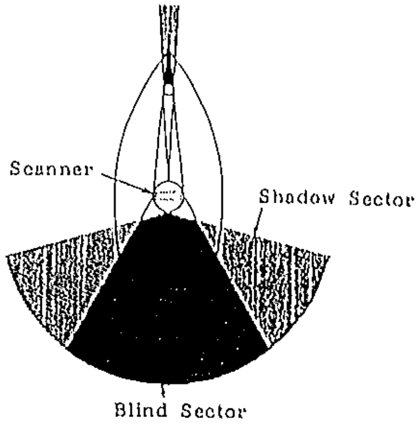

Fig.6-15 Shadows caused by objections

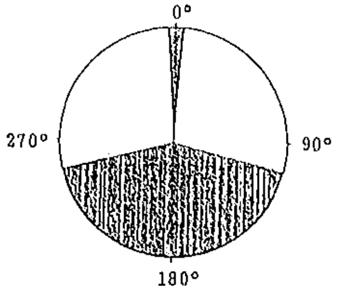

Fig.6-16 Shadow Sector Diagram

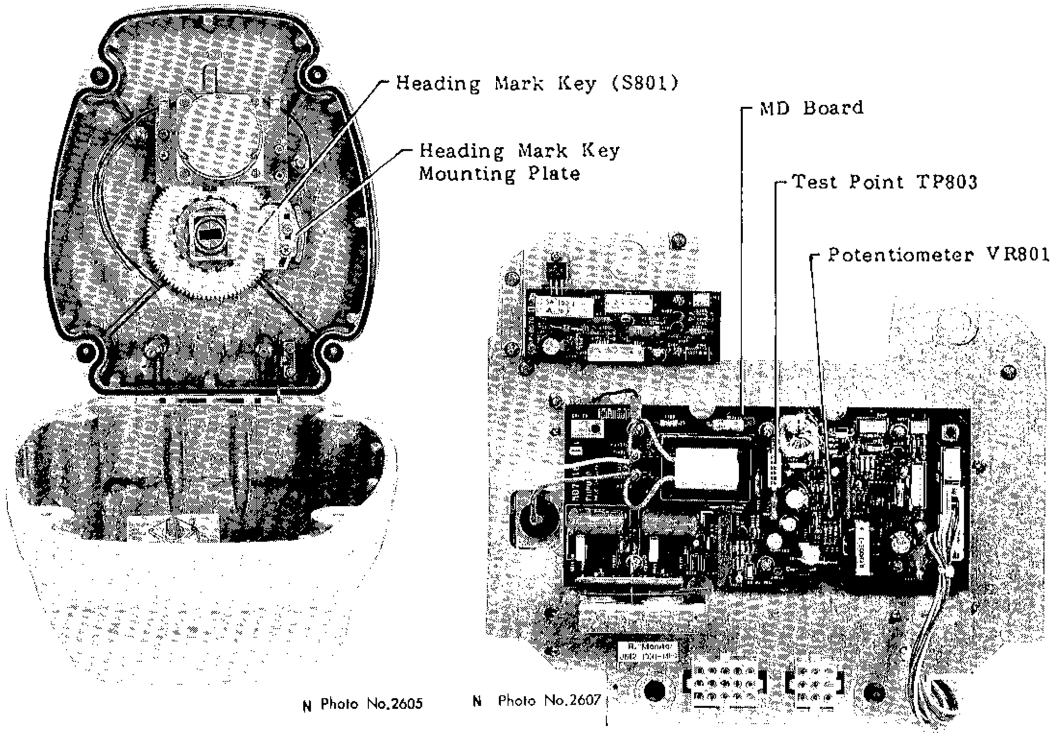

(a) Transceiver module removed

(b) Bottom side of transceiver module (shield cover removed)

Fig.6-17 Scanner Unit

SCHEMATIC DIAGRAMS

No.	Title	Type	Dwg. No.	Page
1	INTERCONNECTION DIAGRAM		C3342-C01	S-1
2	DISPLAY UNIT		C3330-K01	S-2
3	POWER SUPPLY	PTU-7875	C3319-K02	S-3
4	PRESET CONTROLS/POT. ASSY.	ADJ-8324/ VOL-8325	C3330-K02	S-4
5	CRT DISPLAY	A1QA9DSP45	C3309-010	S-5
6	SCANNER UNIT		C3320-K01	S-6
7	IF AMPLIFIER	IF-7758	C3319-K07	S-7
8	BEARING SIGNAL GENERATOR	MP-8070	C3327-K02	S-8

OUTLINE DRAWINGS

No.	Title	Type	Dwg. No.	Page
1	RADAR DISPLAY UNIT	RDP-075	C3309-007	D-1
2	RADAR SCANNER UNIT	XN8-RSB-0035	C3246-003	D-2

FURUNO

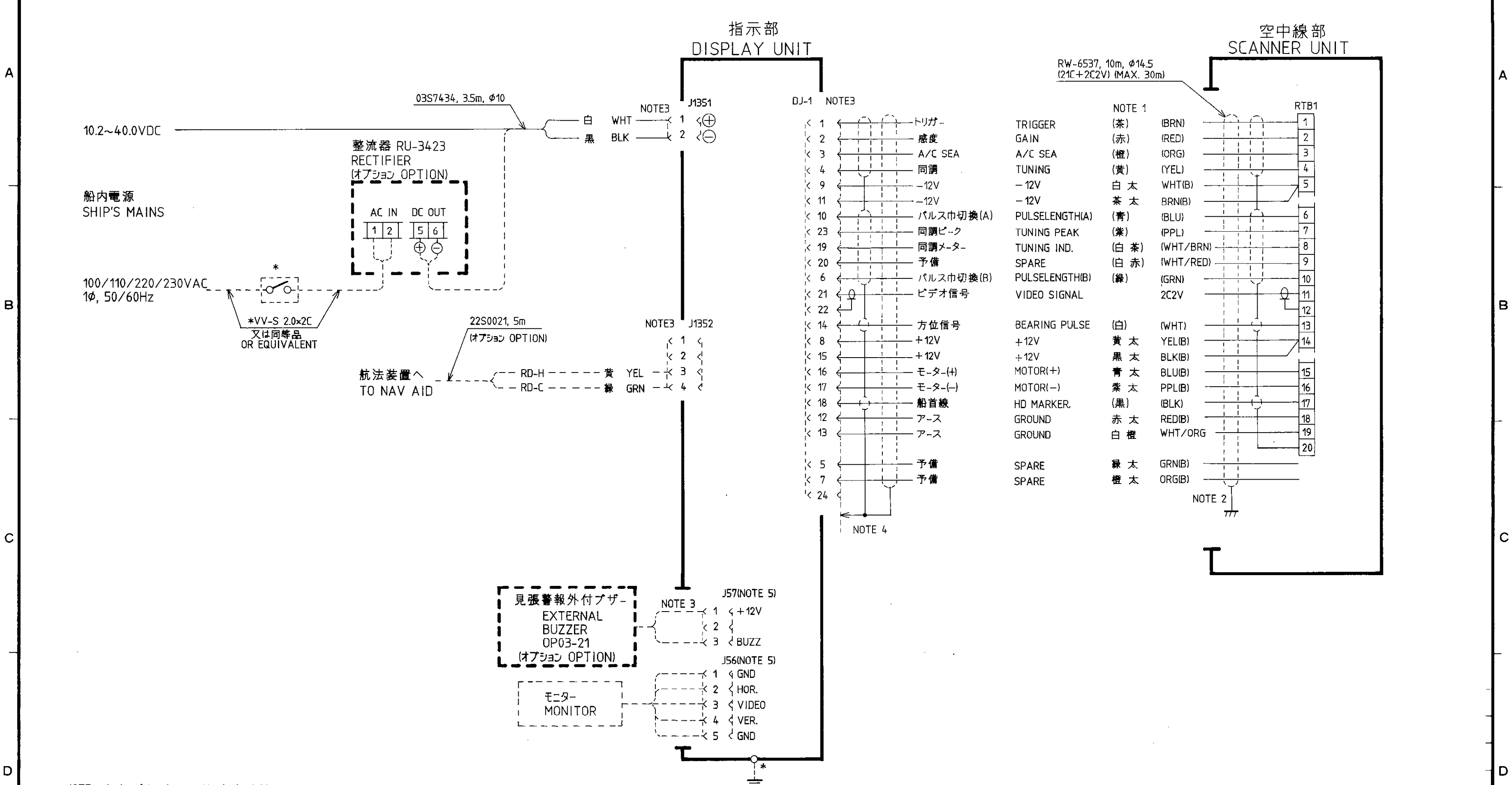

NOTE : 1. ケーブルのカラーコードで( )は内側ケーブルを示す。
WIRE COLOR CODE, ( ) : INSIDE, (B) : LARGE WIRE.
2. 空中線部側のシールドは完全にアースすること。
SHIELD SHOULD BE EFFECTIVELY GROUNDED AT SCANNER UNIT.
3. コネクタープラグ取付済。
CONNECTOR PLUG FACTORY-WIRED.
4. シールドはコネクターケースを通してアースされている。
SHIELD GROUNDED THRU CONNECTOR CASE.
5. 信号処理基板上のジャック。
JACKS ARE PROVIDED ON PROCESSOR BOARD.
6. * 造船所支給。 SHIPYARD SUPPLY.

MODEL 1760

承認 APPROVED	NOV.21.'89 T. NAKANO	名称 TITLE	相互結線図 INTERCONNECTION DIAGRAM
検図 CHECKED	NOV.21.'89 N. SAITO		
製図 DRAWN	21st Nov.'89 Y. HATAI	図番 DWG.NO.	C3342-C01-A

FURUNO ELECTRIC CO., LTD.

S-1

FURUNO

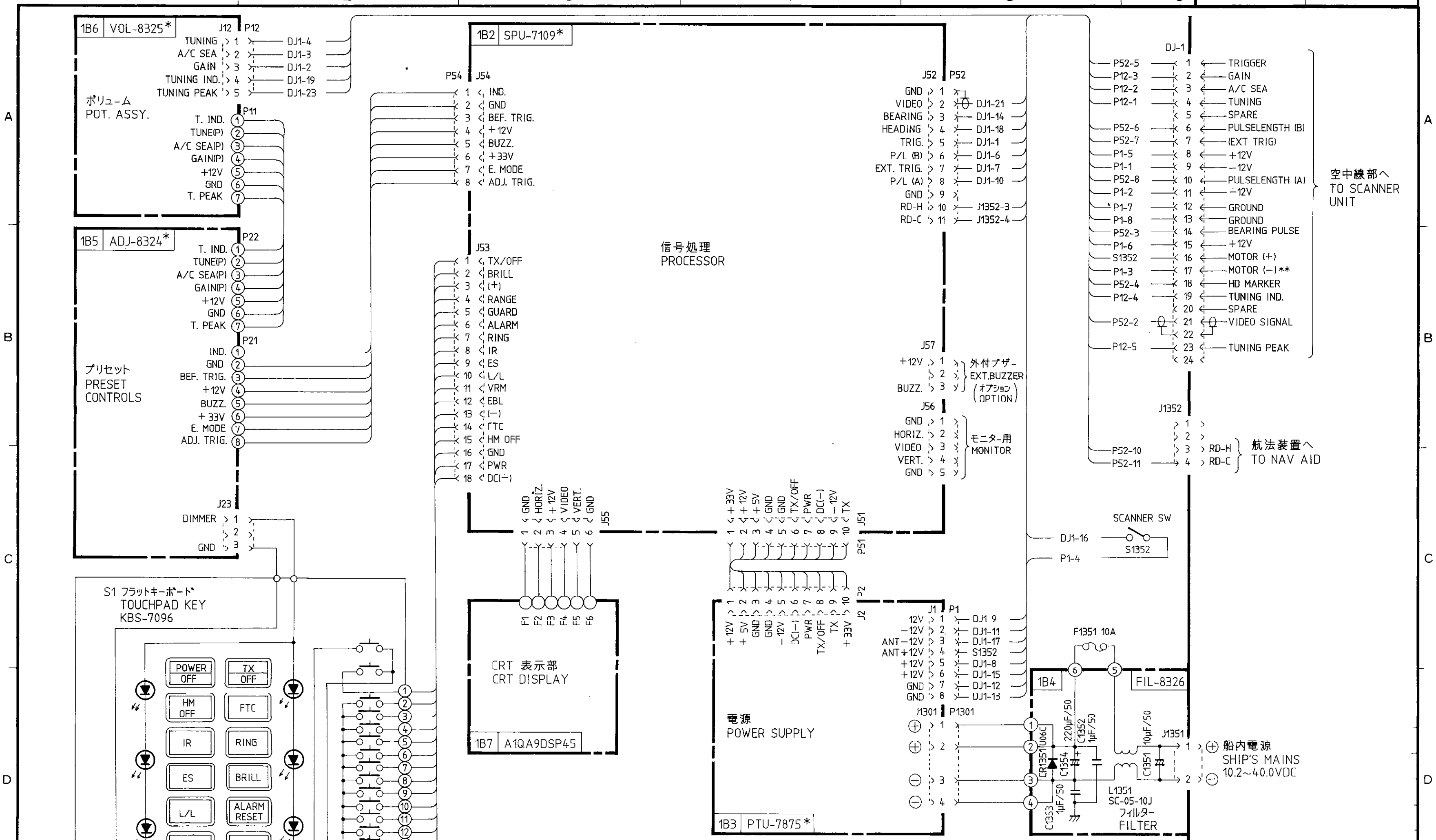

NOTE : *

MODEL \ PCB	SPU	ADJ	VOL	PTU
MODEL 1730/1760	SPU-7109B	ADJ-8324	VOL-8325	PTU-7875
MODEL 1750	SPU-7109A	ADJ-8324A	VOL-8325A	PTU-7875A

** SPARE FOR MODEL 1730

MODEL 1750
MODEL 1760
MODEL 1730

承認 APPROVED		名称 TITLE	指示部 DISPLAY UNIT
検図 CHECKED			
製図 DRAWN		図番 DWG.NO.	C3330-K01-E

FURUNO ELECTRIC CO., LTD.

S-2

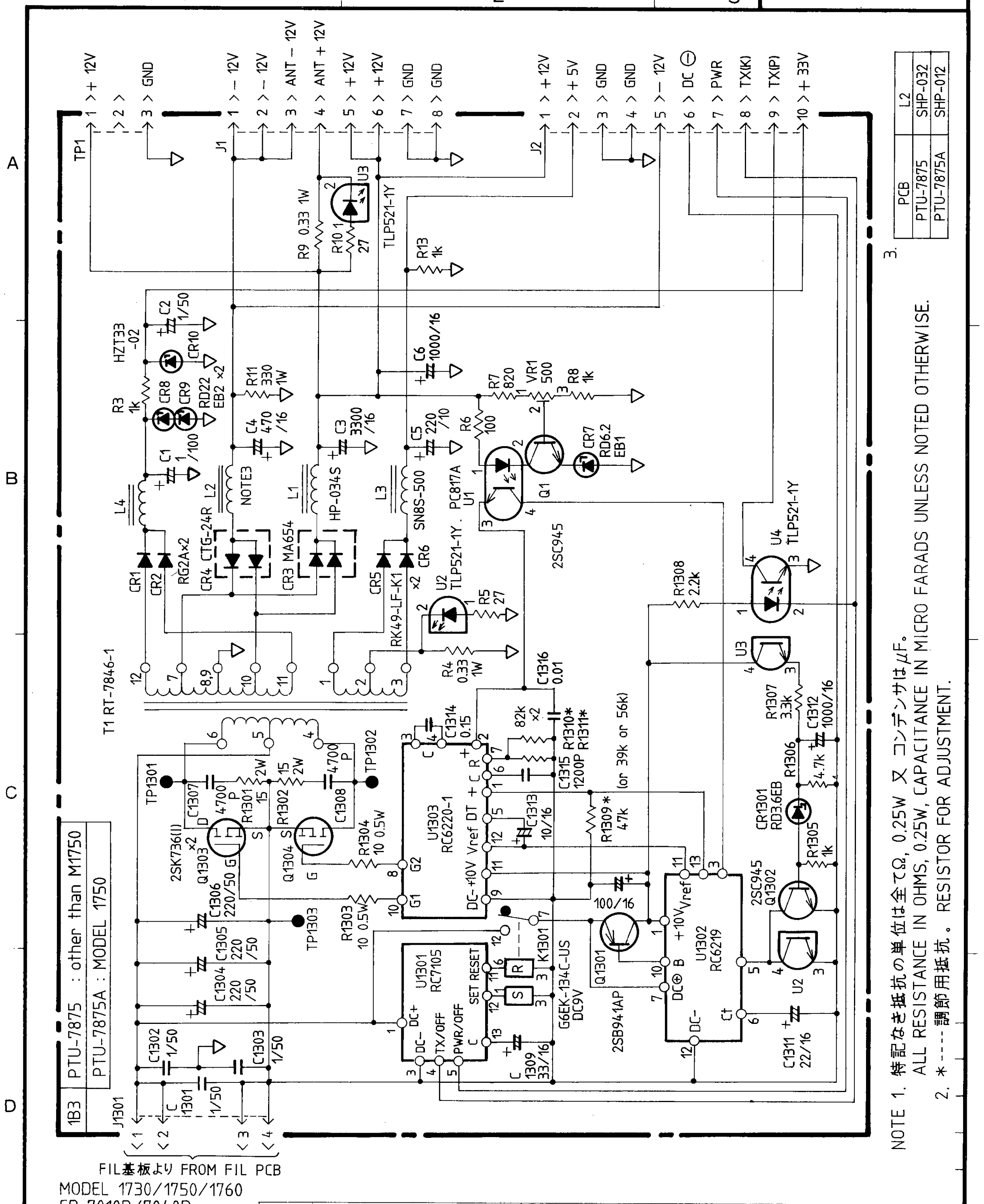

FIL基板より FROM FIL PCB

MODEL 1730/1750/1760
FR-7010D/7040D
MODEL 1830/1930/1940

品番 ITEM	品名 NAME	材質 MATERIAL	数量 Q'TY	図番 DWG. NO.	摘要 REMARKS
承認 APPROVED		三角法 THIRD ANGLE PROJECTION	名称 TITLE	PTU-7875 電源基板 POWER SUPPLY	
検図 CHECKED		尺度 SCALE			
製図 DRAWN		重量 WEIGHT kg	図番 DWG. NO.	C3319-K02-F	

FURUNO ELECTRIC CO., LTD.

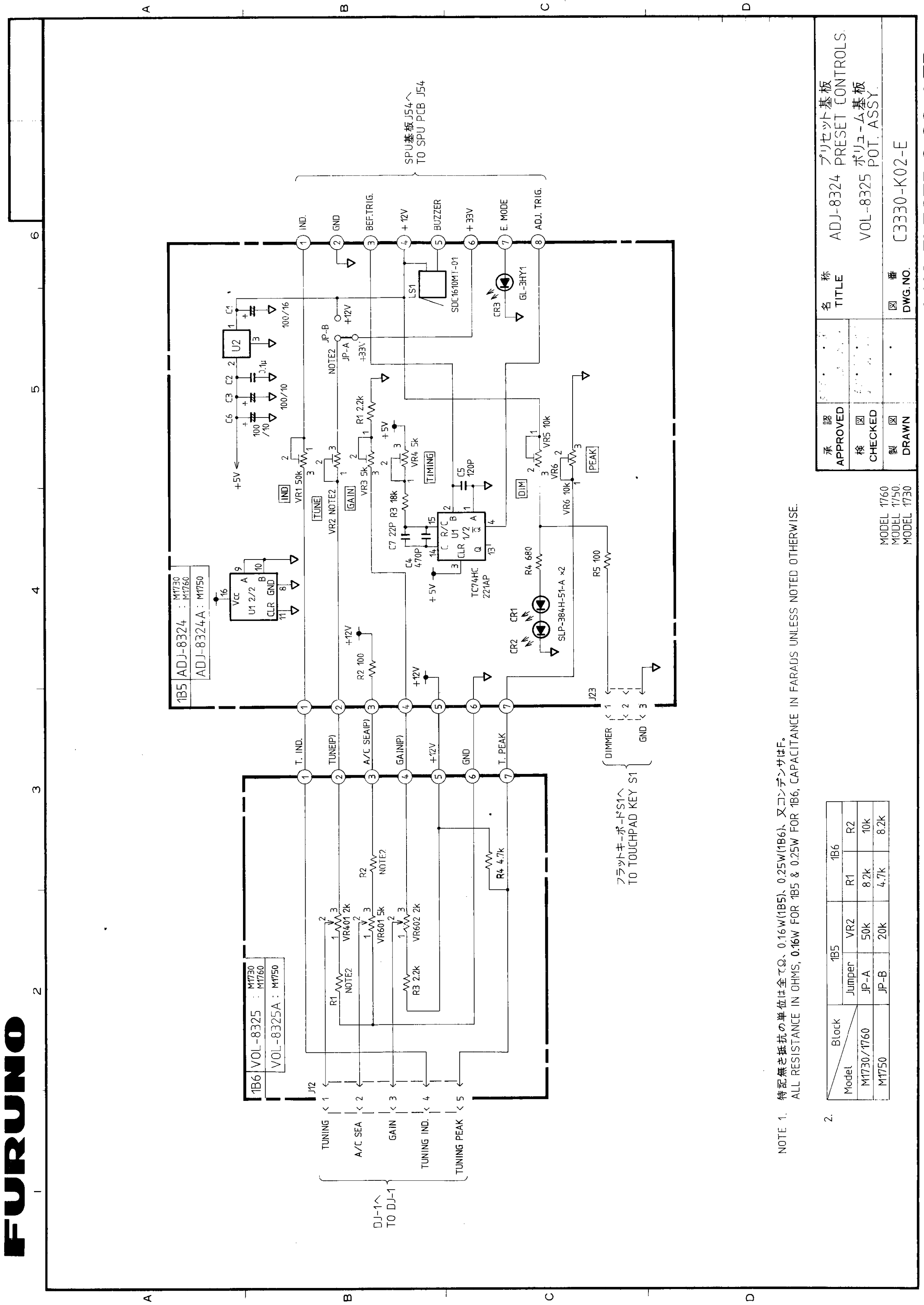

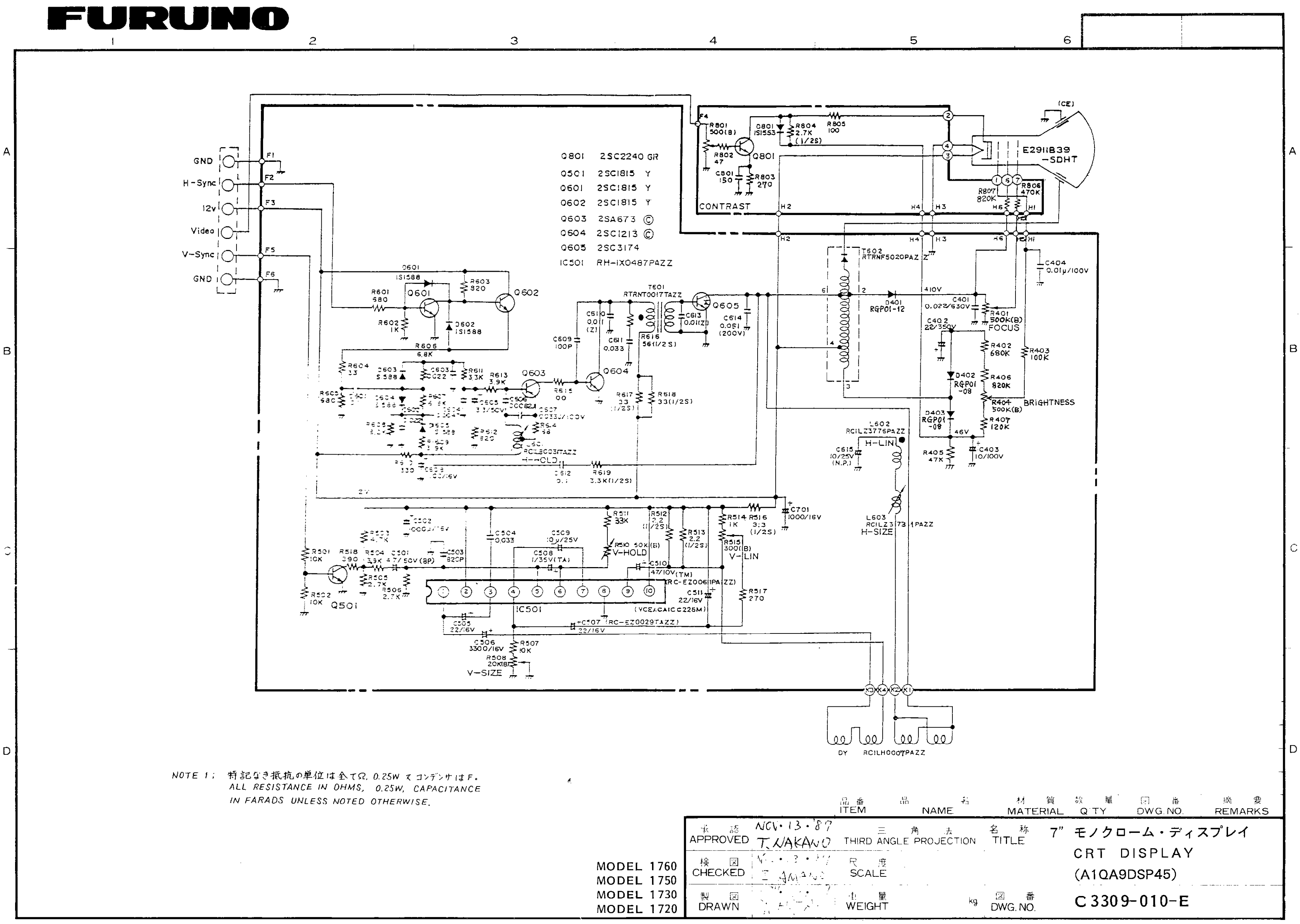

FURUNO ELECTRIC CO., LTD.

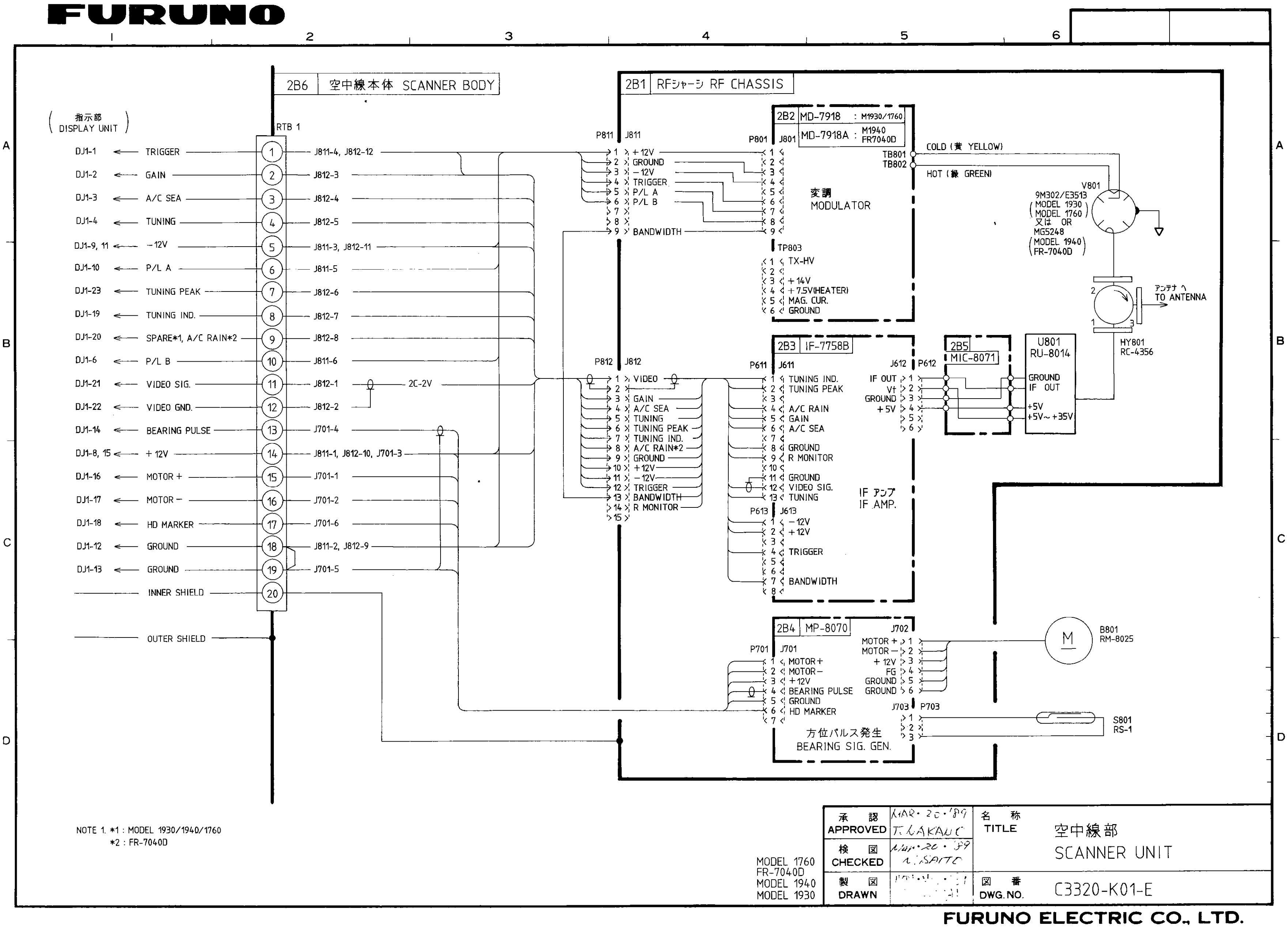

FURUNO ELECTRIC CO., LTD.

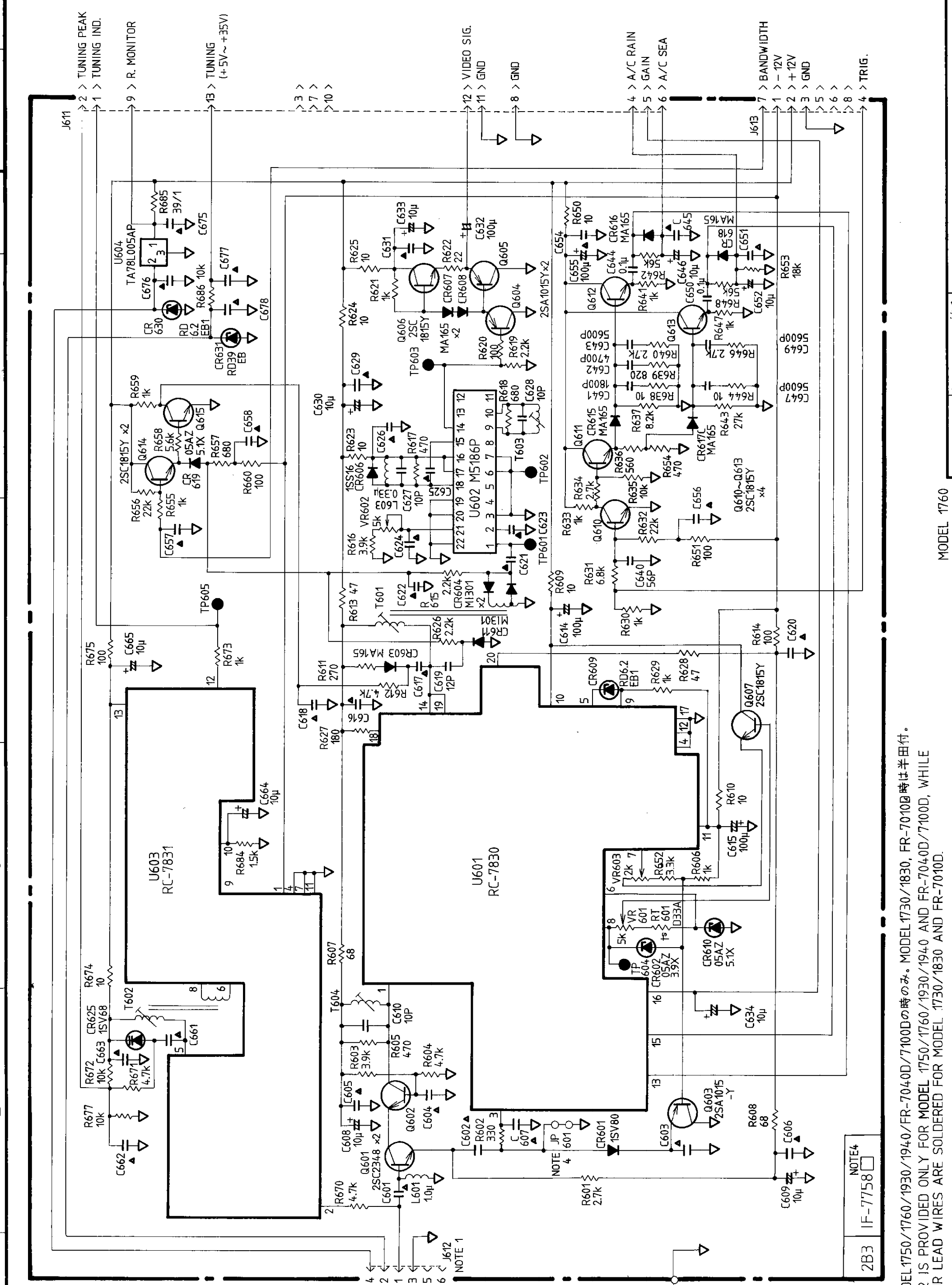

NOTE 4	IF-7758□	2B3

MODEL 1760
MODEL 1750
MODEL 1730
FR-7100D
FR-7040D
FR-7010D
MODEL 1940
MODEL 1930
MODEL 1830

名称 TITLE	IF-7758 IFアンプ基板 IF AMPLIFIER
承認 APPROVED	
検図 CHECKED	
製図 DRAWN	Y. HATAI
図番 DWG. NO.	C3319-K07-D

FURUNO ELECTRIC CO., LTD.

NOTE 1. MODEL1750/1760/1930/1940/FR-7040D/7100Dの時のみ。MODEL1730/1830、FR-7010D時は半田付。
J612 IS PROVIDED ONLY FOR MODEL 1750/1760/1930/1940 AND FR-7040D/7100D, WHILE FOUR LEAD WIRES ARE SOLDERED FOR MODEL 1730/1830 AND FR-7010D.
2. 特記なき抵抗の単位は全てΩ, 1/6W コンデンサはF, コイルはH。
ALL RESISTANCE IN OHMS 1/6W, CAPACITANCE IN FARADS AND INDUCTANCE IN HENRIES UNLESS NOTED OTHERWISE.
3. ▲ : 1000pF, 50V.
4.

MODEL	PCB	JP601
MODEL 1730/1750/1830, FR-7010D	IF-7758C	SHORT
MODEL 1760/1930/1940, FR-7040D/7100D	IF-7758B	OPEN

FURUNO

FURUNO

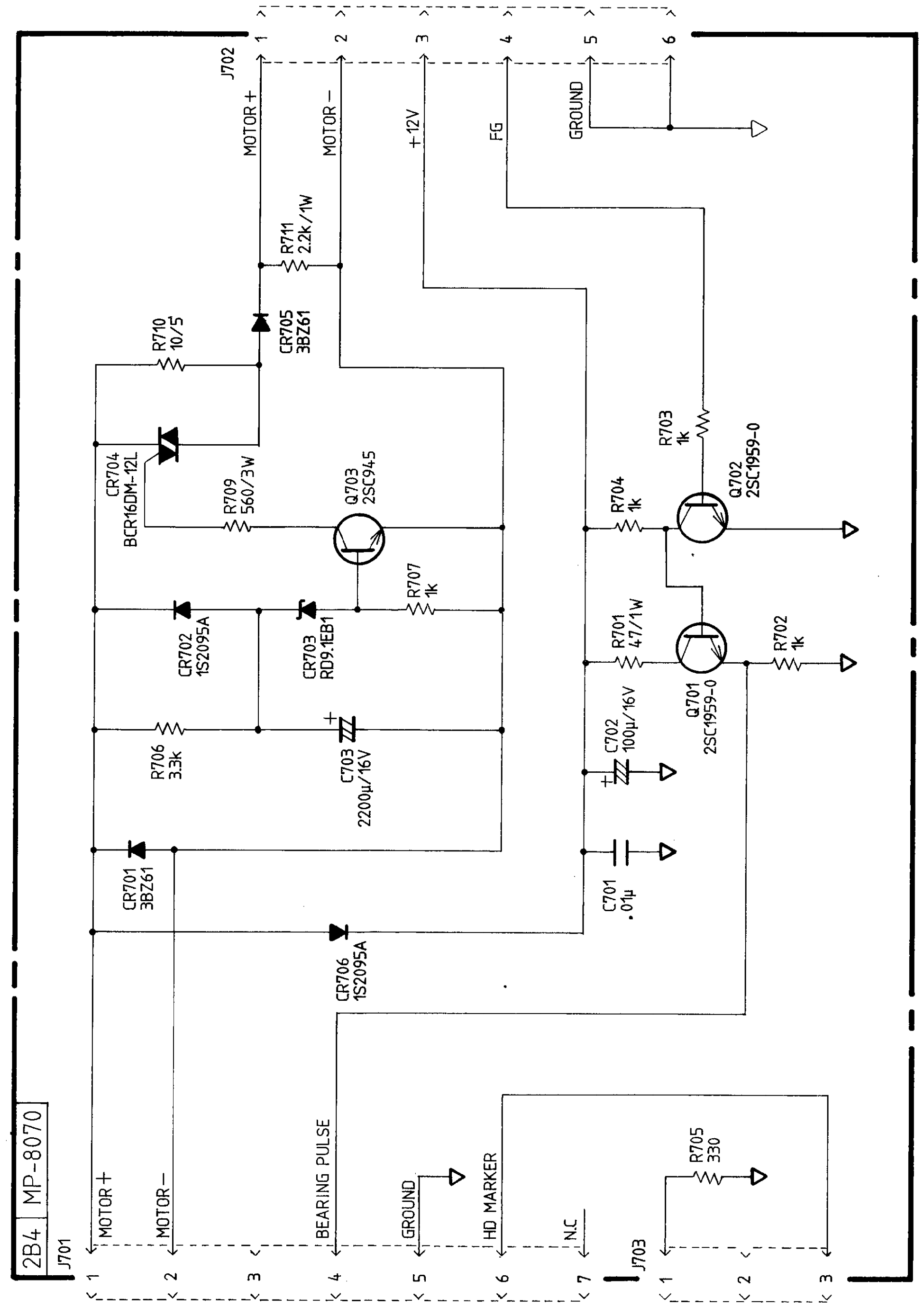

NOTE 1. 特記なき抵抗の単位は全てΩ, 0.25W 又コンデンサはF。
ALL RESISTANCE IN OHMS, 0.25W, CAPACITANCE IN FARADS UNLESS NOTED OTHERWISE.

FR-7040D
MODEL 1930/1940/1760

品番 ITEM	品名 NAME	材質 MATERIAL	数量 Q'TY	図番 DWG. NO.	摘要 REMARKS

承認 APPROVED	SEP. 14. '89 T. NAKANO	三角法 THIRD ANGLE PROJECTION	名称 TITLE MP-8070 方位パルス発生基板 BEARING SIG. GEN.
検図 CHECKED	SEP. 14. '89 N. SAITO	尺度 SCALE	
製図 DRAWN	14TH. Sept. '89 Y. HATAI	重量 WEIGHT kg	図番 DWG. NO. C3327-K02-B

FURUNO ELECTRIC CO., LTD.

FURUNO

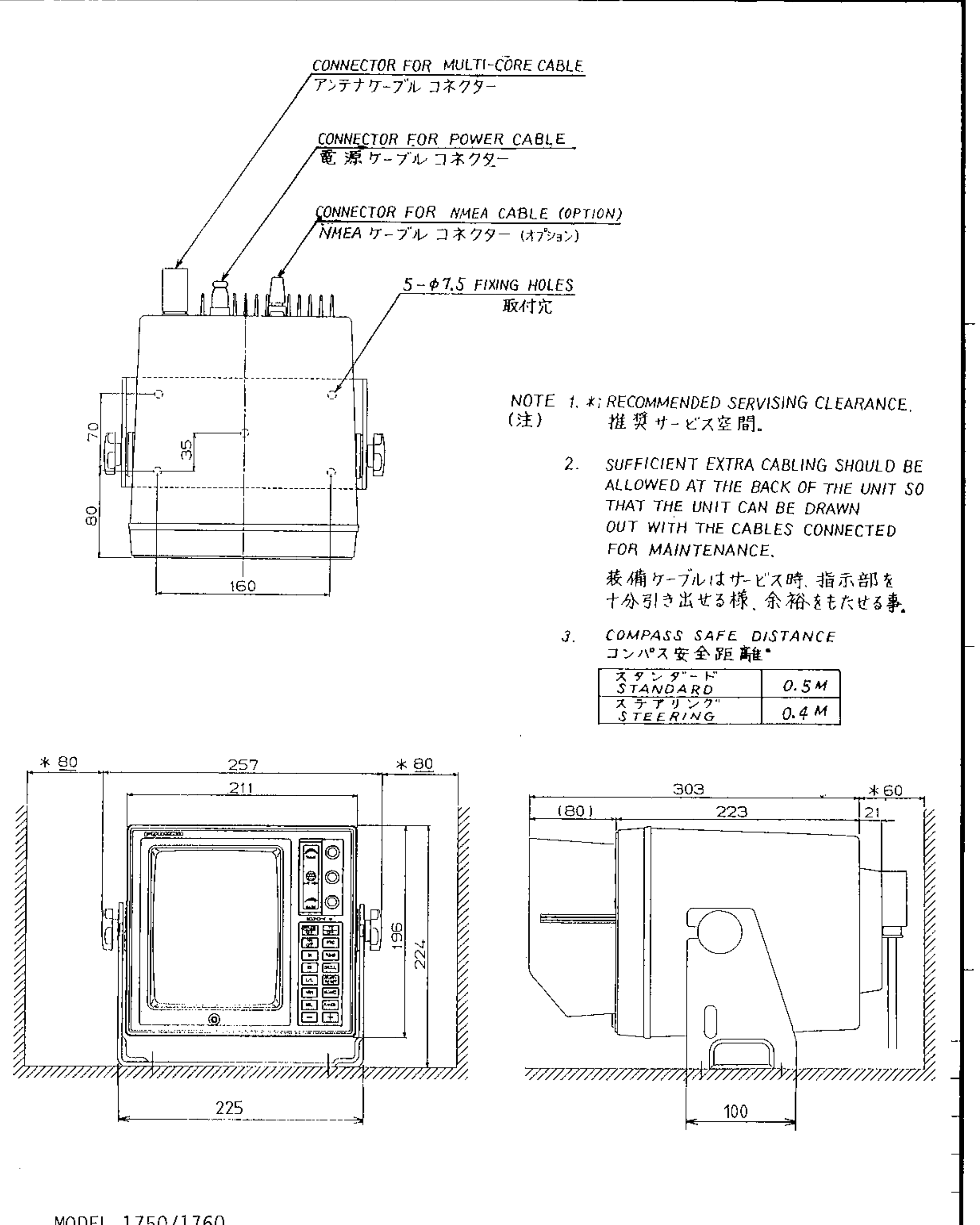

品番 ITEM	品名 NAME	材質 MATERIAL	数量 Q'TY	図番 DWG. NO.	摘要 REMARKS

承認 APPROVED	NOV. 4. '87 T. NAKANO	三角法 THIRD ANGLE PROJECTION		名称 TITLE RADAR DISPLAY UNIT レーダー指示部外寸図
検図 CHECKED	NOV. 4. '87 I. AMANO	尺度 SCALE	1/5	
製図 DRAWN	4TH. NOV. '87	重量 WEIGHT	4.9 kg	図番 DWG. NO. C3309-007-E

FURUNO ELECTRIC CO., LTD.

FURUNO

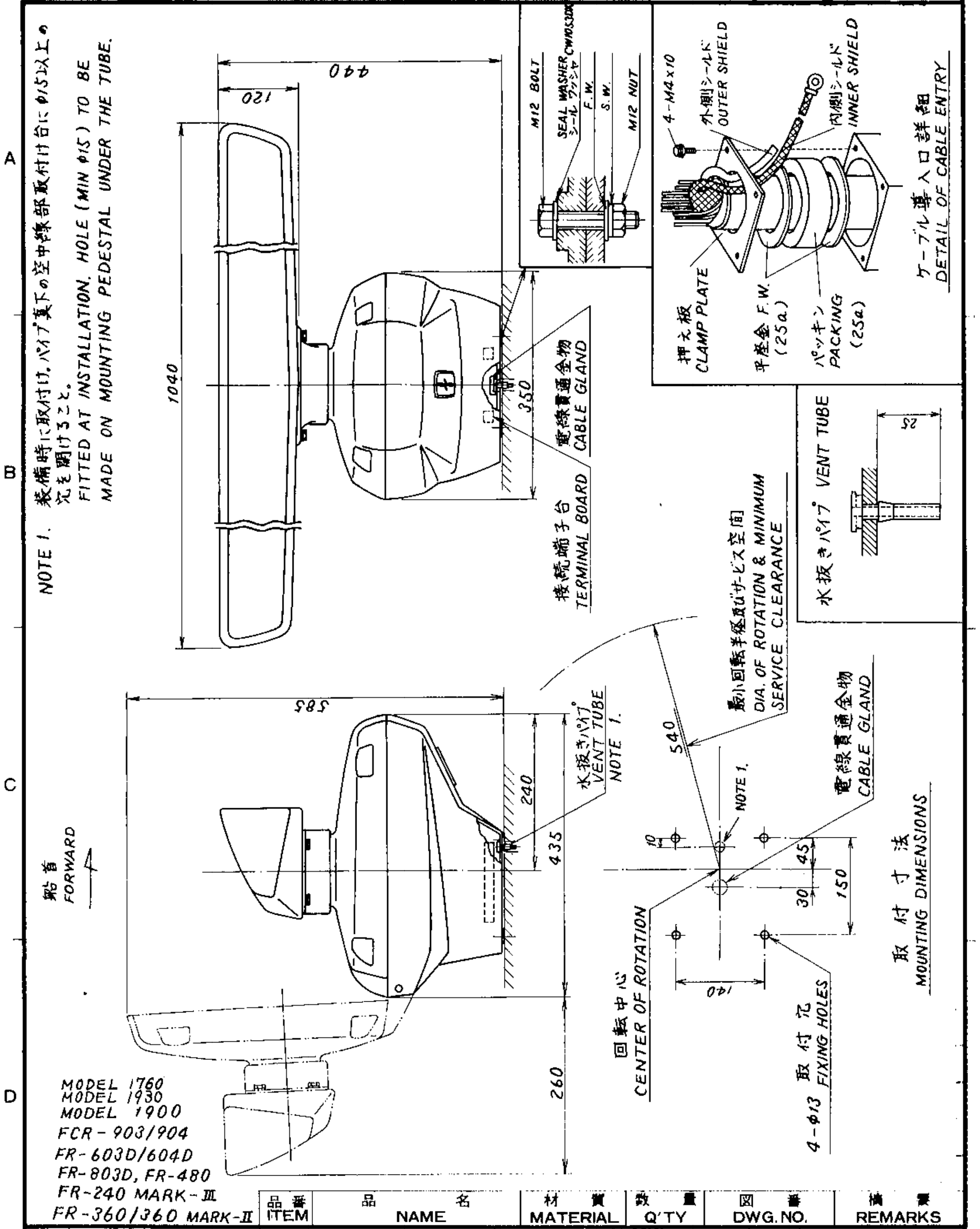

品番 ITEM	品名 NAME	材質 MATERIAL	数量 Q'TY	図番 DWG. NO.	摘要 REMARKS

承認 APPROVED	JUN. 24. '80	三角法 THIRD ANGLE PROJECTION		名称 TITLE レーダー空中線部寸法図 RADAR SCANNER UNIT
検図 CHECKED	JUN. 23. '80	尺度 SCALE	1/8	
製図 DRAWN	JUNE. 23. '80	重量 WEIGHT	23 kg	図番 DWG. NO. C3246-003-K

REV. : 3/85

FURUNO ELECTRIC CO., LTD.